SuperStack® 3 Switch 4200 Series Management Quick Reference Guide

Summary of Software Features

This table summarizes the software features that are supported by the Switch 4200 series.

Feature	Switch 4200 Series
Automatic IP Configuration	Supported
Aggregated Links	Supported on 10/100/1000BASE-T ports and GBIC ports
Automatic configuration of Aggregated Links - LACP (IEEE 802.3ad)	Supported in software version 2.xx and all subsequent versions.
Unit Stacking	Supported in software version 2.xx and all subsequent versions. Up to four units can be connected to form a stack via the 10/100/1000BASE-T ports.
Broadcast Storm Control	Supported
Virtual LANs (VLANs)	Support for up to 60 VLANs using the IEEE 802.1Q standard
Multicast Filtering	128 Multicast filter groups supported
Spanning Tree Protocol (802.1D-1998)	Supported
Rapid Spanning Tree Protocol (802.1w)	Supported
Quality of Service (QoS)	Support for two 802.1p priority queues per port
RMON	Four groups supported: Statistics, History, Alarms, Events
Email Notification of Events	Supported
Management	Web interface, command line interface, CLI Wizard and SNMP supported
Port Security	Disconnect Unauthorized Device (DUD) supported
Alert LED	Supported in software version 2.xx and all subsequent versions.



For information about managing the software features of the Switch, refer to the "SuperStack 3 Switch Management Interface Reference Guide" on the CD-ROM that accompanies the Switch.

Web Interface Map – Device View

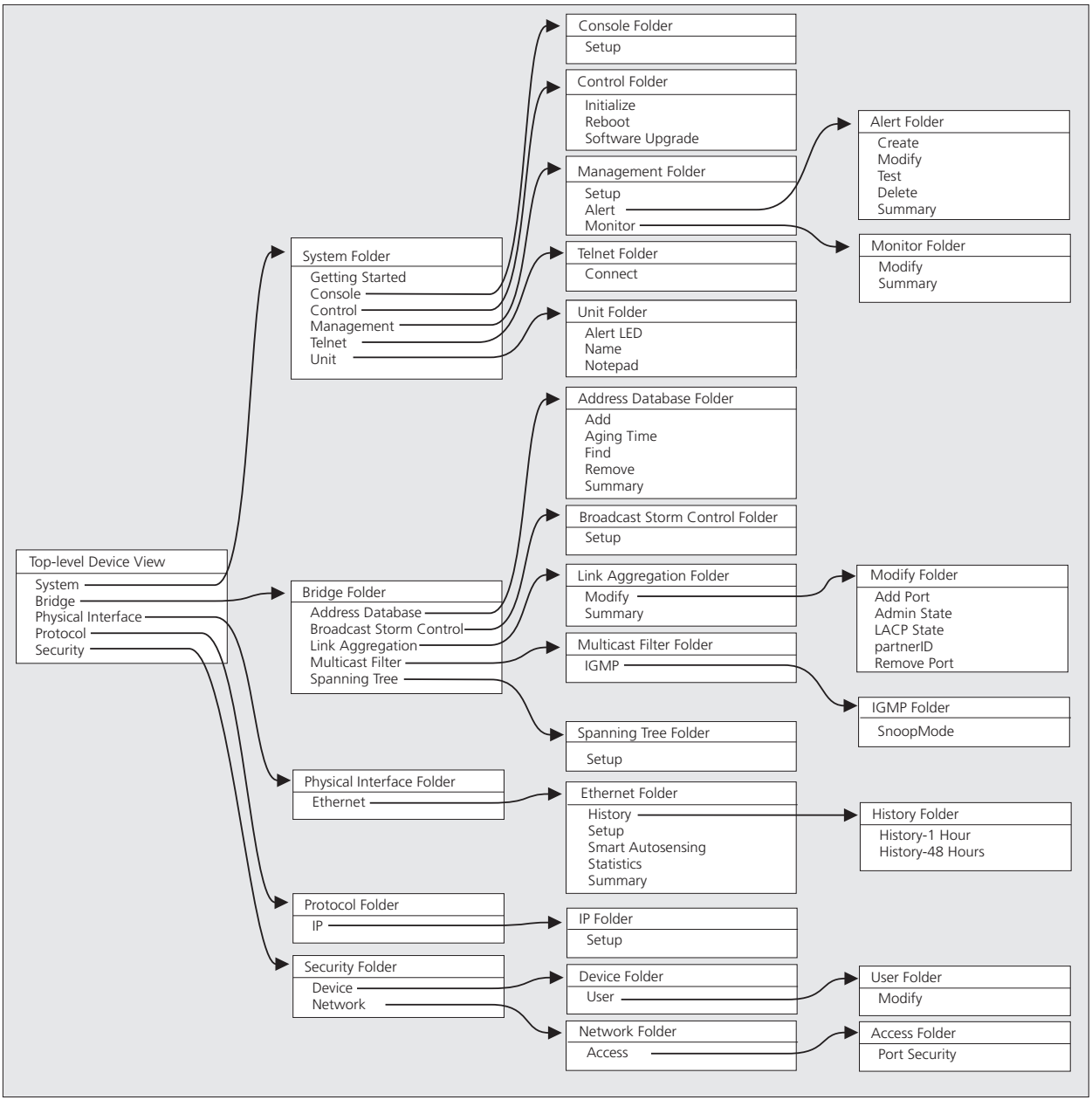

For detailed descriptions of the web interface operations and the command line interface (CLI) commands that you require to manage the Switch please refer to the Management Interface Reference Guide supplied in HTML format on the CD-ROM that accompanies your Switch.

Web Interface Device Mimic

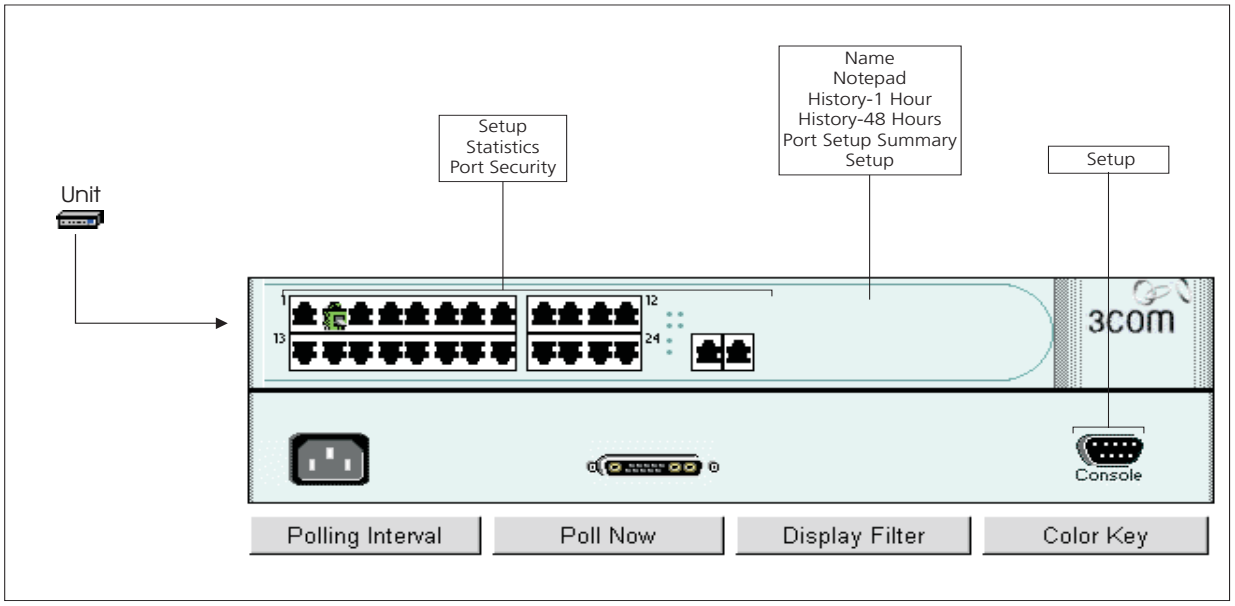

A Quick Guide to the Web Interface Operations

This table describes the operations that are available in the Web Interface.

Operation	What does the Operation do?
Bridge Address Database Add	Adds an address to the database.
Bridge Address Database Aging Time	Configures the aging period for the address database.
Bridge Address Database Find	Displays the location of a MAC address.
Bridge Address Database Remove	Deletes an address from the database.
Bridge Address Database Summary	Views all addresses that are stored against a particular port or aggregated link.
Bridge Broadcast Storm Control Setup	Configures Broadcast Storm Control parameters for the stack.
Bridge Link Aggregation Modify AddPort	Adds a port to an aggregated link.
Bridge Link Aggregation Modify Admin State	Changes the state of an aggregated link.
Bridge Link Aggregation Modify LACP State	Enables or disables LACP on a port.
Bridge Link Aggregation Modify Partner ID	Sets an aggregated link to connect to a specified partner unit.
Bridge Link Aggregation Modify Remove Port	Deletes a port from an aggregated link.
Bridge Link Aggregation Summary	Lists all of the aggregated links.
Bridge Multicast Filter IGMP SnoopMode	Configures IGMP multicast learning for the unit.
Bridge Spanning Tree Setup	Configures spanning tree parameters.
Physical Interface Ethernet History History-1 Hour	Displays packet activity for all ports on a unit over the previous hour.

Operation (Continued)	What does the Operation do?
Physical Interface Ethernet History History-48 Hours	Displays packet activity for all ports on a unit over the previous 48 hours.
Physical Interface Ethernet Setup	Sets up single or multiple ethernet ports.
Physical Interface Ethernet Smart Autosensing	Configures smart autosensing for the unit.
Physical Interface Ethernet Statistics	Displays statistics for packet and error traffic on one or more ports.
Physical Interface Ethernet Summary	Displays summary information for the unit.
Protocol IP Setup	Configures the IP information for the unit.
Security Device User Modify	Modifies the password of the current user.
Security Network Access Port Security	Sets the security mode of single or multiple ports on a unit.
System Console Setup	Configures the type, speed and flow of a console port.
System Control Initialize	Initailizes the unit to factory default settings.
System Control Reboot	Resets the unit.
System Control Software Upgrade	Upgrades the software on the unit.
System Getting Started	Guides you through the initial configuration of the unit.
System Management Alert Create	Creates and defines an email alert and its distribution.
System Management Alert Delete	Deletes an existing email alert.
System Management Alert Modify	Modifies an existing email alert and its distribution.
System Management Alert Summary	Displays summary information for configured email alerts.
System Management Alert Test	Sends a test email alert.
System Management Monitor Modify	Sets up a device or port to be monitored for email alerts.
System Management Monitor Summary	Displays summary information for devices or ports on which monitoring is enabled.
System Management Setup	Changes information for the unit.
System Telnet Connect	Starts a Telnet session to the unit in a separate window.
System Unit Alert LED	Displays the Alert LED configuration for the unit selected.
System Unit Name	Assigns a name to the unit.
System Unit Notepad	Opens a notepad for the unit.

Command Line Interface Map

- **To display sub-menus:**
  At the *Select menu option* prompt, enter the name of the menu or menus.
- **To display parent menus:**
  At the *Select menu option* prompt, enter **`quit`**.
- **To display the Top-level menu:**
  Press the [Esc] key.
- **To obtain help:**
  At the *Select menu option* prompt, enter **`?`**.

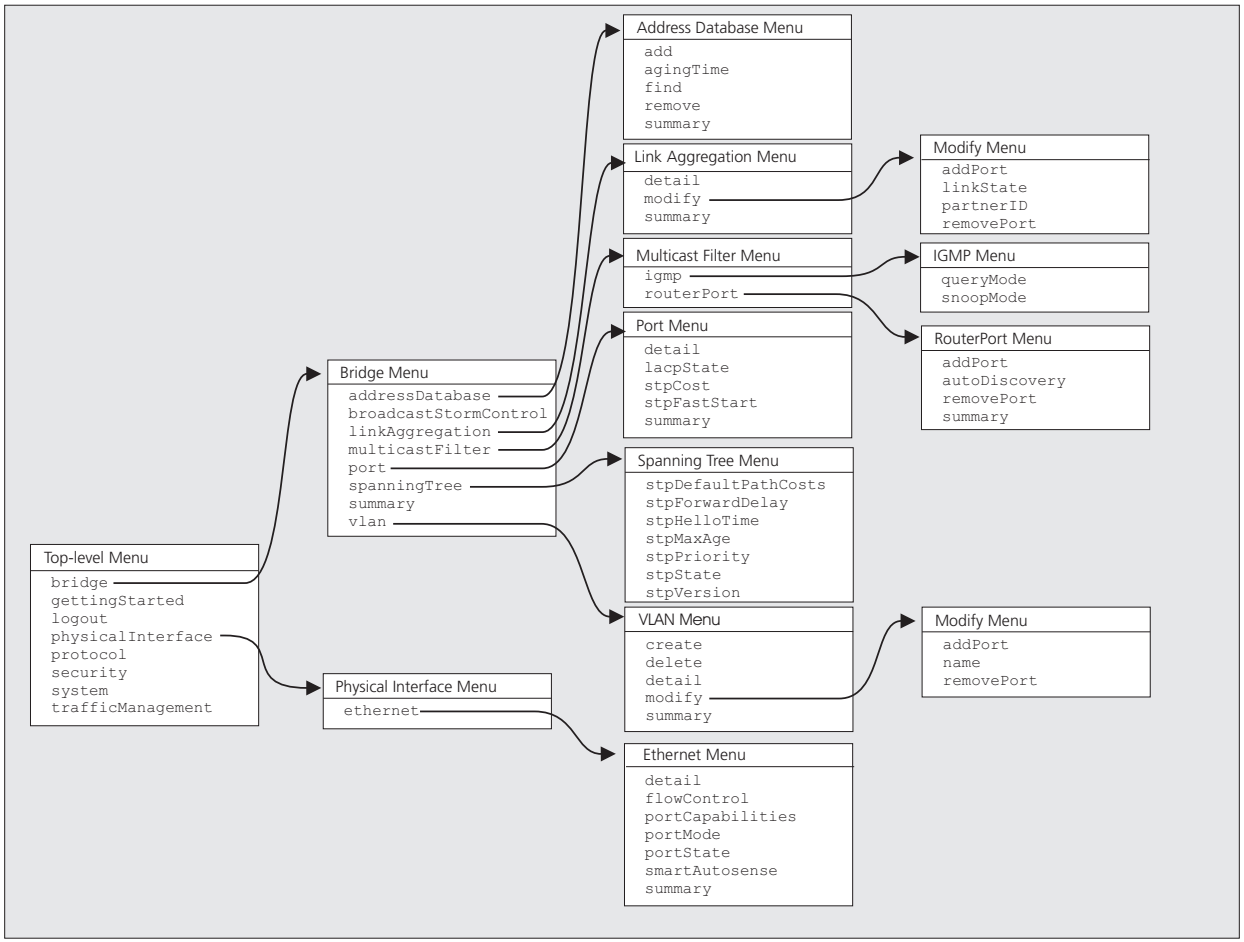

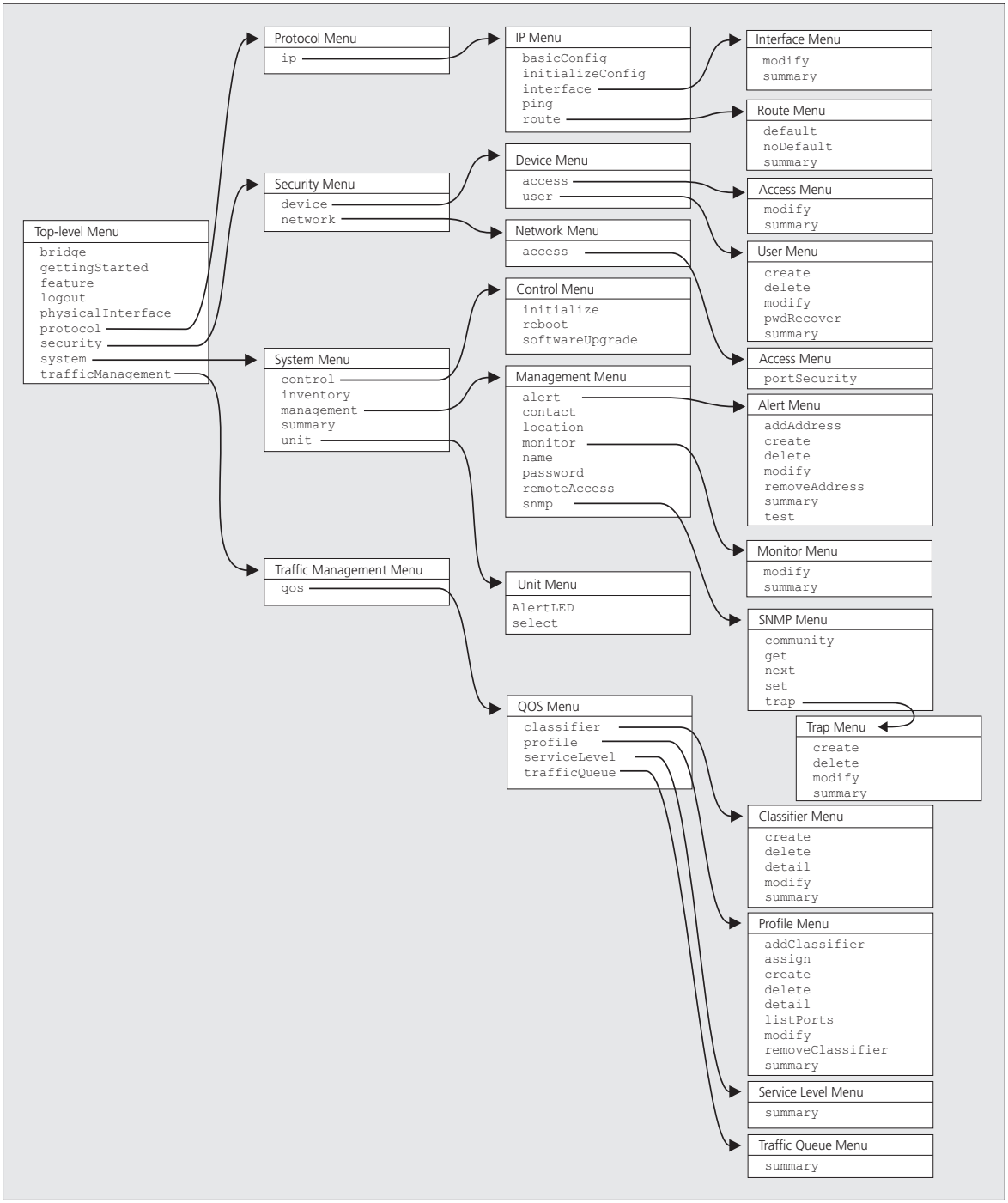

For detailed descriptions of the web interface operations and the command line interface (CLI) commands that you require to manage the Switch please refer to the Management Interface Reference Guide supplied in HTML format on the CD-ROM that accompanies your Switch.

A Quick Guide to the Command Line Interface Commands

This table describes the commands that are available in the Command Line Interface.

Command	What does the Command do?
bridge addressDatabase add	Adds a statically configured address.
bridge addressDatabase agingTime	Sets the bridge address aging time.
bridge addressDatabase find	Finds an address.
bridge addressDatabase remove	Removes an address.
bridge addressDatabase summary	Displays summary information on addresses.
bridge broadcastStormControl	Enables or disables broadcast storm control.
bridge linkAggregation detail	Displays detailed information on an aggregated link.
bridge linkAggregation modify addPort	Adds a port to an aggregated link.
bridge linkAggregation modify linkState	Enables or disables an aggregated link.
bridge linkAggregation modify partnerID	Sets an aggregated link to connect to a specified partner unit.
bridge linkAggregation modify removePort	Removes a port from an aggregated link.
bridge linkAggregation summary	Displays summary information on an aggregated link.
bridge multicastFilter igmp queryMode	Enables or disables IGMP query mode.
bridge multicastFilter igmp snoopMode	Enables or disables IGMP Multicast learning.
bridge multicastFilter routerPort addPort	Adds a statically configured router port.
bridge multicastFilter routerPort autoDiscovery	Enables or disables router port auto discovery.
bridge multicastFilter routerPort removePort	Removes a router port.
bridge multicastFilter routerPort summary	Displays summary information on a router port.
bridge port detail	Displays detailed information on a port.
bridge port lacpState	Enables or disables LACP on a port.
bridge port stpCost	Sets the Spanning Tree path cost parameter.
bridge port stpFastStart	Enables or disables Spanning Tree fast start.
bridge port summary	Displays summary information on a port.
bridge spanningTree stpDefaultPathCosts	Sets the bridge Spanning Tree default path costs
bridge spanningTree stpForwardDelay	Sets the bridge Spanning Tree forward delay parameter.
bridge spanningTree stpHelloTime	Sets the bridge Spanning Tree hello time parameter.
bridge spanningTree stpMaxAge	Sets the bridge Spanning Tree maximum age parameter.
bridge spanningTree stpPriority	Sets the bridge Spanning Tree priority parameter.
bridge spanningTree stpState	Enables or disables Spanning Tree on a bridge.
bridge spanningTree stpVersion	Selects the version of Spanning Tree to run on the bridge
bridge summary	Displays summary information on the bridge.
bridge vlan create	Creates a VLAN.
bridge vlan delete	Deletes a VLAN.
bridge vlan detail	Displays detailed information on a VLAN.
bridge vlan modify addPort	Adds a port to a VLAN.
bridge vlan modify name	Names a VLAN.

Command (Continued)	What does the Command do?
bridge vlan modify removePort	Removes a port from a VLAN.
bridge vlan summary	Displays summary information on a VLAN.
gettingStarted	Displays the CLI Wizard
logout	Logs the User out of the CLI.
physicalInterface ethernet detail	Displays detailed information on an Ethernet port.
physicalInterface ethernet flowControl	Enables or disables flow control.
physicalInterface ethernet portCapabilities	Sets the port capabilities.
physicalInterface ethernet portMode	Sets the port speed and duplex mode.
physicalInterface ethernet portState	Enables or disables an Ethernet port.
physicalInterface ethernet smartAutosense	Enables or disables smart autosensing.
physicalInterface ethernet summary	Displays summary information on an Ethernet port.
protocol ip basicConfig	Performs basic IP management configuration.
protocol ip initializeConfig	Resets IP information to factory defaults.
protocol ip interface modify	Modifies IP interface information.
protocol ip interface summary	Displays summary information on the IP interface.
protocol ip ping	Polls remote devices.
protocol ip route default	Defines the default route.
protocol ip route noDefault	Removes the default route.
protocol ip route summary	Displays summary information on the default route.
security device access modify	Modifies access rights.
security device access summary	Displays summary information on access rights.
security device user create	Creates a user.
security device user delete	Deletes a user.
security device user modify	Modifies a user.
security device user pwdRecover	Enables or disables password recovery.
security device user summary	Displays summary information on users.
security network access portSecurity	Enables or disables DUD and NTK.
system control initialize	Resets to factory defaults.
system control reboot	Performs a system reboot.
system control softwareUpgrade	Performs an agent software upgrade.
system inventory	Displays unit information.
system management alert addAddress	Adds an email address to an alert.
system management alert create	Creates an alert.
system management alert delete	Deletes an alert.
system management alert modify	Modifies an existing alert.
system management alert removeAddress	Removes an email address from an alert.
system management alert summary	Displays summary information for the alert settings.
system management alert test	Generates a test alert.
system management contact	Sets the system contact.

Command (Continued)	What does the Command do?
system management location	Sets the system location.
system management monitor modify	Modifies a monitored item.
system management monitor summary	Displays summary information for monitored items.
system management name	Sets the system name.
system management password	Sets the system password.
system management remoteAccess	Changes remote access permissions.
system management snmp community	Sets the SNMP community string.
system management snmp get	Gets SNMP objects.
system management snmp next	Gets the next SNMP objects.
system management snmp set	Sets SNMP objects.
system management snmp trap create	Creates a trap destination.
system management snmp trap delete	Deletes a trap destination.
system management snmp trap modify	Modifies a trap destination
system management snmp trap summary	Displays summary information on a trap destination.
system summary	Displays summary information.
system unit alertLED	Controls the Alert LED.
system unit select	Inputs commands to another unit.
trafficManagement qos classifier create	Creates a classifier.
trafficManagement qos classifier delete	Deletes a classifier.
trafficManagement qos classifier detail	Displays detailed classifier information.
trafficManagement qos classifier modify	Modifies a classifier.
trafficManagement qos classifier summary	Displays summary information on classifiers.
trafficManagement qos profile addClassifier	Adds a classifier to a QoS profile.
trafficManagement qos profile assign	Assigns QoS profiles to ports.
trafficManagement qos profile create	Creates a QoS profile.
trafficManagement qos profile delete	Deletes a QoS profile.
trafficManagement qos profile detail	Displays detailed information about a QoS profile.
trafficManagement qos profile listPorts	Lists all ports with their associated QoS profiles.
trafficManagement qos profile modify	Modifies a QoS profile.
trafficManagement qos profile removeClassifier	Removes a classifier from a QoS profile.
trafficManagement qos profile summary	Displays a summary of QoS profiles.
trafficManagement qos serviceLevel summary	Displays summary information on service levels.
trafficManagement qos trafficQueue summary	Displays summary information on traffic queues.

Copyright © 2002, 3Com Technologies. All rights reserved.
Unless otherwise indicated, 3Com registered trademarks are registered in the United States and may or may not be registered in other countries.
3Com and the 3Com logo are registered trademarks of 3Com Corporation.

Part Number: DQA1730-0AAA02
Published: October 2002