SuperStack® II Switch 1100/3300 ATM Expansion Module User Guide

Version 1.00

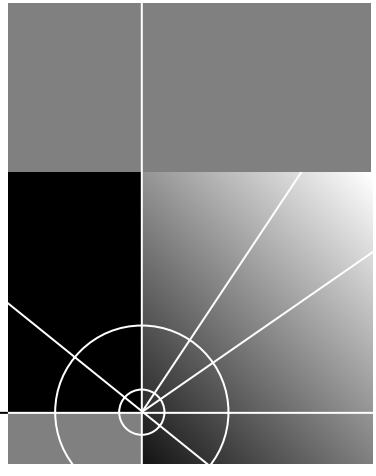

http://www.3com.com/

Part No.DUA3311-0AAA05
Published August 1999

3Com Corporation
5400 Bayfront Plaza
Santa Clara, California
95052-8145

Copyright © 1999, 3Com Corporation. All rights reserved. No part of this documentation may be reproduced in any form or by any means or used to make any derivative work (such as translation, transformation, or adaptation) without written permission from 3Com Corporation.

3Com Corporation reserves the right to revise this documentation and to make changes in content from time to time without obligation on the part of 3Com Corporation to provide notification of such revision or change.

3Com Corporation provides this documentation without warranty, term, or condition of any kind, either implied or expressed, including, but not limited to, the implied warranties, terms or conditions of merchantability, satisfactory quality, and fitness for a particular purpose. 3Com may make improvements or changes in the product(s) and/or the program(s) described in this documentation at any time.

If there is any software on removable media described in this documentation, it is furnished under a license agreement included with the product as a separate document, in the hard copy documentation, or on the removable media in a directory file named LICENSE.TXT or !LICENSE.TXT. If you are unable to locate a copy, please contact 3Com and a copy will be provided to you.

UNITED STATES GOVERNMENT LEGEND

If you are a United States government agency, then this documentation and the software described herein are provided to you subject to the following:

All technical data and computer software are commercial in nature and developed solely at private expense. Software is delivered as "Commercial Computer Software" as defined in DFARS 252.227-7014 (June 1995) or as a "commercial item" as defined in FAR 2.101(a) and as such is provided with only such rights as are provided in 3Com's standard commercial license for the Software. Technical data is provided with limited rights only as provided in DFAR 252.227-7015 (Nov 1995) or FAR 52.227-14 (June 1987), whichever is applicable. You agree not to remove or deface any portion of any legend provided on any licensed program or documentation contained in, or delivered to you in conjunction with, this User Guide.

Unless otherwise indicated, 3Com registered trademarks are registered in the United States and may or may not be registered in other countries.

3Com, the 3Com logo, SmartAgent, SuperStack, and Transcend, are registered trademarks of 3Com Corporation. ATMLink, AutoLink, CoreBuilder, and Total Control are trademarks of 3Com Corporation. 3Com Facts is a service mark of 3Com Corporation.

All other company and product names may be trademarks of the respective companies with which they are associated.

Guide written and edited by Marvin Rabinovitch and Debbie Zioni. Formatting by Leah Hakim. Movie scripting and placement by Marvin Rabinovitch. Filming and movie editing by Oren Ben-Ami. Technical illustration by Pearl Goldberg and Marvin Rabinovitch. Production by 3Com.

CONTENTS

ABOUT THIS GUIDE

Introduction 9
Terminology 9
ATM Terminology 10
Finding Information in This Guide 10
Conventions 11

1 FEATURES AND BENEFITS

ATM Benefits 13
ATM Expansion Module Features 14

2 NETWORK LAYER CONCEPTS — LAN EMULATION

LAN Emulation Overview 17
Emulated LAN Components 17
LAN Emulation Client (LEC) 18
LAN Emulation Server (LES) 18
Broadcast and Unknown Server (BUS) 18
LAN Emulation Configuration Server (LECS) 19
Emulated LAN Connections 20
Control VCCs 20
Data VCCs 21
Frame Ordering 22
Operation of the LAN Emulation 23
Connecting a LEC to an ELAN 23
Registration 25
Address Resolution 25
Connection Management 26
LAN Emulation Components in Your Network 26
Joining the ELAN 28
Mapping Ethernet and ATM Addresses 29

What Happens to Unicast Frames? 31
What Happens to Broadcast and Multicast Frames? 31

3 NETWORK LAYER CONCEPTS — ATM & ATM ADAPTATION

The Layered Network Architecture 33
ATM Adaptation Layer (AAL) 34
Asynchronous Transfer Mode (ATM) Layer 35
ATM Basics 35
ATM is Service Transparent 36
ATM is Connection-Oriented 37
ATM Interfaces 40
The ATM Layer and Cell Structure 42
Physical Layer 43

4 VIRTUAL LAN CONCEPTS

What is a Virtual LAN (VLAN)? 45
Benefits of VLANs 45
VLANs and Your Switch 46
The Default VLAN 47
Defining New VLANs 47
Placing a Port in a Single VLAN 47
Placing a Port in Multiple VLANs 47
Using IEEE 802.1Q Learning 48
Connecting VLANs to Other VLANs 49
Connecting to VLANs on Legacy Switch Units 49
VLAN Configuration Examples 50
Using Untagged Connections 50
Using 802.1Q Tagged Connections 51
Connecting to a Legacy Network 53
Extending VLANs into the ATM Network 55

5 PUTTING YOUR ATM NETWORK TOGETHER

Planning Your Network 59
ATM Configuration Rules 60
Extending VLANs Through the ATM Network 61

ATM Connections Within Your Network 62

6 NETWORK CONFIGURATION EXAMPLES

ATM Backbone in the Building 63
Campus Configuration 64
Making a Building Resilient to Network Failure 66

7 INSTALLING AND SETTING UP THE ATM EXPANSION MODULE

Safety Information 67
- Multi-Mode Module LED Warning 68
- Single-Mode Module Laser Warning 68

Electromagnetic Compatibility 70
- FCC Statement 70
- CSA Statement 70
- VCCI Statement 70

Movie 1 Installing and Connecting the 1100/3300 ATM Expansion Module 71
- Information to the User 72

Device Support 72
Pre-installation Procedure 72
- Upgrading Software 72
- Check the Power Supply 73

Installation 74
- Connecting a Cable to the ATM Port 75
- Powering Up the Switch 75

Post-Installation Checks 77
- ATM Expansion Module LEDs 77
- SuperStack II Switch Rear Panel LEDs 78
- Checking the Power Supply 78
- Checking the Physical Connections 78

8 ACCESSING MANAGEMENT FEATURES

IP Configuration 81
Menu Considerations 82
- Screen Map 83
- Correcting Text Entry 83

TELNET 83
Practical Considerations 84
Logging On 84
Logging Off 85
Resilient Links 85
Setup Conditions 86
Setting Up Resilient Links 87

9 MANAGING THE ATM EXPANSION MODULE

Submenus 89
Main Menu Options 91
Configuring System Parameters [1] 91
System Menu 91
Initialize Submenu [1,2] 92
Passwords Submenu [1,3] 92
Reset Submenu[1,4] 92
Logger Submenu [1,5] 92
System Software Download Submenu [1,6] 93
Configuring an ATM Port [2] 94
ATM Expansion Module Configuration 94
Port Submenu [2,1] 94
VCC Submenu [2,2] 95
Administering IP and SNMP Management [3] 96
DIsplay Submenu [3,1] 96
SNMP Configuration Submenu [3,2] 97
Extending VLANs into the ATM Network [4] 98
VN Configuration Menu 98
Upgrading Software 100
Preliminaries 100
Downloading 100

10 MONITORING THE ATM EXPANSION MODULE

Statistics Overview 103
ATM Port Statistics 103
VCC Statistics 105

A SAFETY INFORMATION
Important Safety Information 107
L'information de Sécurité Importante 108
Wichtige Sicherheitsinformationen 109

B ATM EXPANSION MODULE TECHNICAL SPECIFICATIONS
Environmental, Safety, and EMC Specifications 111
ATM Cable Specification 111
Optical Standard Supported: 112
SDH Standard Supported 112

C TECHNICAL SUPPORT
On-line Technical Services 115
World Wide Web Site 115
3Com Knowledgebase Web Services 115
3Com FTP Site 116
3Com Bulletin Board Service 116
3Com Facts Automated Fax Service 117
Support from Your Network Supplier 117
Support from 3Com 117

INDEX

3COM CORPORATION LIMITED WARRANTY

ABOUT THIS GUIDE

Introduction

This guide provides the information that you need to install and configure the SuperStack Switch 1100/3300 ATM Expansion Module (agent software version 1) — hereafter referred to as ATM module — within SuperStack II Switches 3300/1100 with version 2.2 and up agent software installed.

This guide is intended for use by network administrators who are responsible for installing and setting up networking equipment. It assumes a basic working knowledge of Local Area Networks.

This guide explains *Asynchronous Transfer Mode (ATM)* and *LAN Emulation (LANE)* concepts, and provides a Bibliography for further reading.



If release notes are shipped with your product and the information there differs from the information in this guide, follow the instructions in the release notes.

Most user guides and release notes are available in Adobe Acrobat Reader Portable Document Format (PDF) or HTML on the 3Com World Wide Web site:

http://www.3com.com/

Terminology

The device into which the ATM Module is fitted, is known simply as the *Switch*. An example of a Switch is 3Com's SuperStack II Switch 1100.

This type of Switch is often referred to as an *edge-device*, *edge-switch* or *boundary switch*.

The term *ATM Switch* is used to identify the ATM device to which the edge-switch is connected. Examples of an ATM Switch are 3Com's CoreBuilder® 7000 and CoreBuilder 9000 Switches.

Switches in 3Com's SuperStack II and LinkSwitch™ device range provide support for the ATM Module.

ATM Terminology

This user guide uses the term *Network-To-Network Interface (NNI)*. You may know this protocol by its alternative name, *Network-to-Node Interface (NNI)*. Additional ATM definitions can be found in the Glossary at the end of this guide.

Finding Information in This Guide

Table 1 shows you where to find specific information within this guide.

Table 1 Information Addresses

Use	Location
Learning concepts	Chapter 1, Features and Benefits Chapter 2, Network Layer Concepts — LAN Emulation Chapter 3, Network Layer Concepts — ATM & ATM Adaptation Chapter 4, Virtual LAN Concepts
Planning your network	Chapter 1, Features and Benefits Chapter 5, Putting Your ATM Network Together Chapter 6, Network Configuration Examples Appendix B, ATM Expansion Module Technical Specifications
Upgrading Software	Chapter 9, Managing the ATM Expansion Module
Installing the ATM Module	Chapter 7, Installing And Setting Up The ATM Expansion Module Appendix B, ATM Expansion Module Technical Specifications
Using TELNET, accessing screens, logging on/off	Chapter 8, Accessing Management Features Appendix B, ATM Expansion Module Technical Specifications
Configuring parameters	Chapter 9, Managing the ATM Expansion Module
Monitoring ATM Statistics	Chapter 10, Monitoring the ATM Expansion Module

Table 1 Information Addresses (continued)

Getting Technical Support	Appendix C, Technical Support
Subjects & concepts lookup	Contents,Index

Conventions

Table 2 and Table 3 list conventions that are used throughout this guide.

Table 2 Notice Icons

Icon	Notice Type	Description
	Information note	Information that describes important features or instructions
	Caution	Information that alerts you to potential loss of data or potential damage to an application, system, or device
	Warning	Information that alerts you to potential personal injury

Table 3 Text Conventions

Convention	Description
`Screen displays`	This typeface represents information as it appears on the screen.
Syntax	The word "syntax" means that you must evaluate the syntax provided and then supply the appropriate values for the placeholders that appear in angle brackets. Example: To enable RIPIP, use the following syntax: SETDefault !<port> -RIPIP CONTrol = Listen In this example, you must supply a port number for <port>.
Commands	The word "command" means that you must enter the command exactly as shown and then press Return or Enter. Commands appear in bold. Example: To remove the IP address, enter the following command: **SETDefault !0 -IP NETaddr = 0.0.0.0**
The words "enter" and "type"	When you see the word "enter" in this guide, you must type something, and then press Return or Enter. Do not press Return or Enter when an instruction simply says "type."

Table 3 Text Conventions (continued)

Convention	Description
Keyboard key names	If you must press two or more keys simultaneously, the key names are linked with a plus sign (+). Example: Press Ctrl+Alt+Del
Words in *italics*	Italics are used to: ▪ Emphasize a point. ▪ Denote a new term at the place where it is defined in the text. ▪ Identify menu names, menu commands, and software button names. Examples: From the *Help* menu, select *Contents*. Click *OK*.

1 FEATURES AND BENEFITS

This chapter describes the main features of the 1100/3300 ATM Expansion Module and the benefits of ATM within your network. The following topics are described:

- ATM Benefits
- ATM Expansion Module Features

The ATM Expansion Module provides a high-speed ATM connection between your SuperStack II Switch and the ATM network.

Positioned within a workgroup or departmental LAN, the ATM Expansion Module provides a fast ATM downlink to the building or ATM campus.

Resilient links protect your Switch from network and equipment failure, while the software upgrade feature future-proofs your Switch by allowing you to add new features as they become available.

Additional features are provided by the SuperStack II Switch, and you should refer to the guide that accompanies your Switch for more details. The Release Notes that accompany the ATM Expansion Module list the SuperStack II Switches that support the ATM Expansion Module.



*If your Switch does not already have version 2.2 of the Switch software installed, **you must upgrade the Switch software** to version 2.2 **before installing the ATM Expansion Module**. To check the version of software installed on the Switch, from the Main Menu, select the SYSTEM option, check the software version number, and then display option.*

ATM Benefits

ATM is the only technology specifically designed to carry voice, video and data traffic simultaneously and to provide the required level of service that these different applications need in order to run effectively across a network. ATM provides the following benefits:

- It is easy and of low cost to add additional services to the ATM network.
- Services can be added as and when they are needed. It is easier to scale ATM networks compared to other network technologies.
- ATM devices interoperate with your existing network. *LAN Emulation (LANE)* is a standards-based technology specifically designed to provide interoperability between existing Ethernet/Fast Ethernet networks and ATM networks. LANE allows users to interoperate with ATM or traditional LAN based servers over ATM for higher performance and functionality.

ATM Expansion Module Features

The following list summarizes the ATM Expansion Module features. These features are described in more detail in this guide.

- Conforms to ATM Forum Standards
- OC-3c/OC-12c 155/622Mbps Interface
  - SONET (STS 3c/STS 12c) and SDH (STM-1/STM-4) compliant
  - Multi-mode Fiber, SC/SM connectors
- *LAN Emulation (LANE)* version 1.0
  - 16 Emulated LAN Clients
  - 8,000 Virtual Circuits
  - 8,000 remote MAC Addresses
- *User-To-Network Interface (UNI)* version 3.0 and 3.1
- *Interim Local Management Interface (ILMI)*
- AAL5 ATM Adaptation Layer
- 16 Virtual LANs (VLANs)
- Data buffer to store 16,000 ATM cells
- High performance with fast data transfer
  - *Wire Rate Transmission* on ATM port
  - Additional latency added by the ATM Expansion Module to the Switch in either direction is 12 microseconds.
- Resilient Links protect your network against cable and equipment failure
- MPOA Ready

- 3Com SmartAgent® support. You can use:
  - An SNMP manager such as 3Com's Transcend® Enterprise Manager
  - TELNET support

2 NETWORK LAYER CONCEPTS — LAN EMULATION

This guide contains several chapters that describe the basic concepts behind ATM technology, and integrating ATM into your existing network:

The following two chapters describe the LAN emulation and ATM adaptation concepts behind the network layer architecture of a typical ATM network. Chapter 4 describes how Virtual LANs (VLANs) are extended into the ATM network, Chapter 5 describes how to plan your ATM network, and Chapter 6 provides some examples of ATM Expansion Module use within an ATM network.

LAN Emulation Overview

LAN Emulation (LE) is a method of connecting LAN users over an ATM network which enables them to communicate with each other as if they were operating over traditional LANs. LE can be configured in an ATM network in several ways:

- To connect legacy end stations directly to other legacy systems, as well as to servers, routers, switches and other networking devices attached to the ATM network.
- To connect bridged-LAN environments to each other over ATM. In this case the Emulated LAN acts as a bridge on the ATM network.
- To connect ATM end stations to each other, enabling communication between them.

More than one emulated LAN can operate on the same ATM network. However, each of the emulated LANs is independent of the others and users cannot communicate directly across emulated LAN boundaries.

Emulated LAN Components

LAN Emulation is implemented as a set of connection services collectively called an *emulated LAN* (ELAN). Each ELAN is composed of a set of *LAN Emulation Clients* (LEC) and a single LAN Emulation Service. The latter

consists of a *LAN Emulation Configuration Server* (LECS), a *LAN Emulation Server* (LES), and a *Broadcast and Unknown Server* (BUS).

LAN Emulation Client (LEC)

Each LEC is incorporated in an ATM edge device, such as a SuperStack II Switch 2700 or 7X00 Interface Card, and represents a set of the device's LAN users to the ATM network. A LEC has a unique *LEC ID* as well as an *ATM address* by which it is known in the emulated LAN. It handles the forwarding of its LAN users' data frames over the ATM network to their destination, a task which also includes ascertaining the destination LEC address and setting up the connection between them.

Also provided is a MAC-level emulated Ethernet service interface to higher level software which implements the *LAN Emulation User to Network Interface* (LUNI).

An ELAN is assigned a name (*ELAN name*). A LEC joining an ELAN may use the ELAN name in the configuration or join phase.

LAN Emulation Server (LES)

The LES coordinates and controls an Emulated LAN. It provides the central "directory" service of an emulated LAN to which a LEC can turn to look up the ATM address of another LEC. The LES directory contains a table of LAN destinations (*LAN destination* refers to either a MAC address or a Route Descriptor) together with the ATM addresses of the LECs that represent them. In order to transmit a data frame to a particular LAN destination, the LEC sends the data frame to the LEC that represents that LAN destination. If the LEC does not already know the destination LEC's address, it can send the LAN destination to the LES to look it up (*resolve)*. To populate the LES directory, the LECs may *register* the LAN destination of LAN stations they represent with the LES. Every Route Descriptor must be registered with the LES.

The LE Service normally resides on a central ATM switch, such as the CoreBuilder 9000, but may reside on an ATM end station instead.

Broadcast and Unknown Server (BUS)

The BUS is the LE connection service which handles ATM traffic other than direct transmissions between LECs. It handles the following:

- Data sent by a LEC to the broadcast MAC address
- All multicast traffic
- Initial unicast frames which are sent by a LEC before the data direct virtual connection to the ATM address has been resolved

- Unknown traffic
- All broadcast, multicast and unknown traffic to and from a LEC passes through a single BUS.

The BUS also handles ATM connections and manages its distribution group.

LAN Emulation Configuration Server (LECS)

The LECS assigns individual LAN Emulation Clients to different emulated LANs. Based on its own programming, configuration database and information provided by clients, it assigns any client which requests configuration information to a particular emulated LAN service by giving the client the LES's ATM address. This method supports the ability to assign a client to an emulated LAN based on either the physical location (ATM address) or the identity of a LAN destination which it is representing (ELAN name). LECs obtain information from a LECS using the configuration protocol.

Emulated LAN Connections

LECs and LESs communicate with each other by means of ATM virtual channel connections (VCCs). Control signals and data transmissions are handled by separate VCCs: Control VCCs and Data VCCs.

Figure 1 Basic LAN Emulation Client Connections

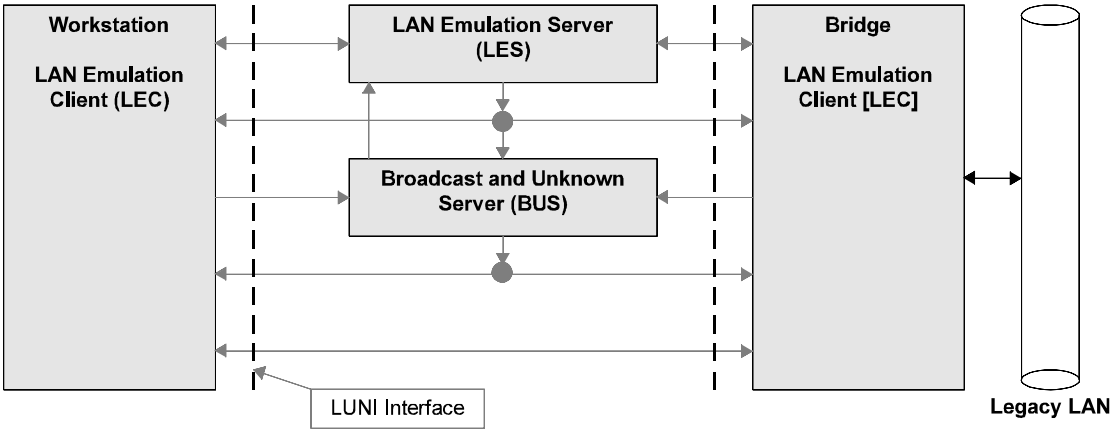

Control VCCs

The control VCCs carry control traffic such as LE_ARP requests and responses. On initialization, control VCCs are established between LEC and LES (bi-directional *control-direct* VCC and *control-distribute* VCC) as well as a bi-directional *configuration* VCC between LEC and LECS. Characteristics of the control VCCs are summarized in Table 4.

Table 4 Control VCCs

VCC Name	From/To	Information carried	Initialized by	Duration
Configuration	LEC<==>LECS	LEC requests and receives configuration information from LECS, including LES address	LEC	While needed
Control-direct	LEC<==>LES	LEC sends and receives controls from LES, including LE_ARP information	LEC	Membership of LEC in ELAN
Control-distribute	LES==>LEC	LES distributes control traffic to LECs, including LE_ARP information	LES	Membership of LEC in ELAN

Data VCCs

Data VCCs carry data frames between LECs and between a LEC and the BUS. Unicast data is normally sent from one LEC to another LEC by *data-direct* VCCs. Data direct VCCs are set up dynamically in a SVC environment by a transmitting LEC after ascertaining the ATM LEC destination address for the packet to be transmitted. Once established, a data-direct VCC remains in place for transmission of subsequent traffic between the two LECs. However, a data direct VCC that remains unused for *VCC-Timeout-period* is released by the LEC.

A multicast data VCC pair (*multicast-send* and *multicast-forward*) are established between a LEC and the BUS in order to allow the LEC to send and receive multicast data. In addition, *initial* unicast data (data whose LEC destination has not yet been ascertained by the transmitting LEC) is sent on the multicast-send VCC to the BUS which forwards it to all other LECs in the same ELAN. Characteristics of the data VCCs are summarized in the following table:

Table 5 Data VCCs

VCC Name	From/To	Information carried	Initialized by	Duration
Data-direct	LEC<==>LEC	Point-to-point Unicast data between LECs	LEC	Established by need and released when unused for VCC-Timeout-period.
Multicast-send	LEC<==>BUS	LEC sends multicast and initial unicast data to BUS	LEC	Membership of LEC in ELAN.
Multicast-forward	BUS==>LEC	BUS distributes data traffic to LECs	BUS	Membership of LEC in ELAN.

Figure 2 illustrates the VCCs active among LAN Emulation Components.

Figure 2 VCCs in LAN Emulation Components

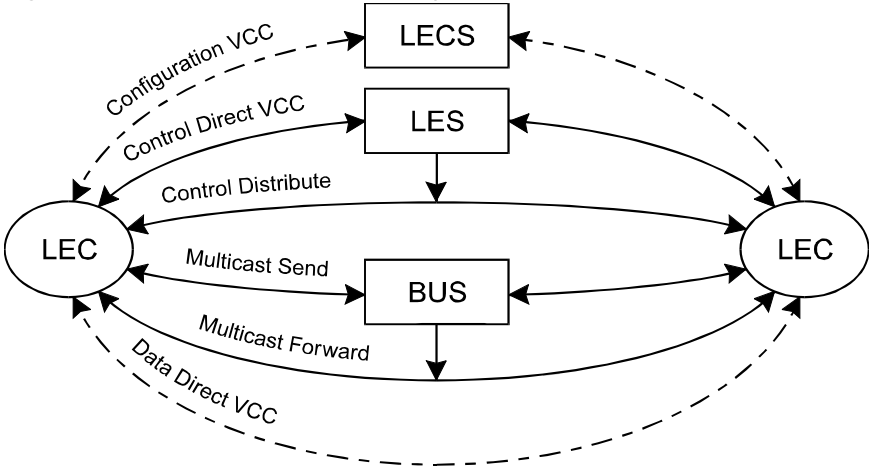

LECS - LAN Emulation Configuration Server
LES - LAN Emulation Server
LEC - LAN Emulation Client
BUS - Broadcast and Unknown Server

Frame Ordering

There are two paths for unicast frames between a sending LAN Emulation Client and a receiving client: one via the BUS and one via a data direct VCC between them. For a given LAN destination, a sending client is expected to use only one path at a time, but the choice of paths may change over time. Switching between those paths introduces the possibility that frames may be delivered to the receiving client out of order. Delivery of out-of-order frames between two LAN endpoints is uncharacteristic of LANs, and undesirable in an ATM emulated LAN. The flush protocol ensures the correct order of delivery of unicast data frames.

Flush Protocol

When switching between paths, the sender first transmits a flush message down the old path and suspends further transmission to that LAN destination. When the flush message is returned by the receiving client (via control VCCs), the sender knows that all previous messages for that LAN destination have been processed and it can start using the new path.

Figure 3 shows the various stages of the flush protocol:

Figure 3 The Flush Protocol.

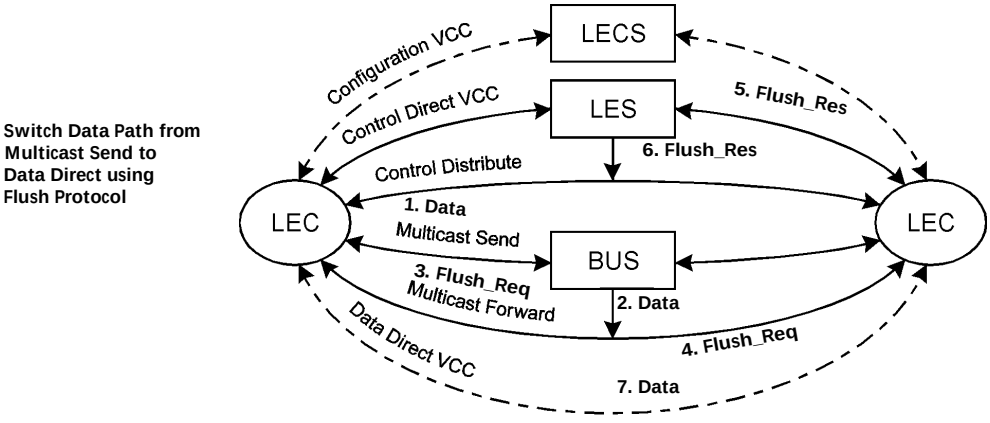

LECS - LAN Emulation Configuration Server
LES - LAN Emulation Server
LEC - LAN Emulation Client
BUS - Broadcast and Unknown Server

Operation of the LAN Emulation

The following functions are performed by the LAN Emulation. The LAN Emulation Clients (LEC) and the LAN Emulation Servers interact by way of a well-defined interface (LUNI).

- Connecting a LEC to an ELAN
- Address Registration
- Address Resolution
- Data Transfer

Connecting a LEC to an ELAN

The connection function of the LEC with the LAN Emulation Server (LES) includes the following:

- LECS connect phase in which a LEC establishes a configuration data-direct VCC to the LECS (optional).
- The configuration phase in which the LEC discovers the LES.

- The join phase in which the LEC establishes its control connections to the LES. The LEC may also implicitly register one MAC address with the LES.
- The registering by the LAN Emulation Client of any number of MAC addresses and/or route descriptors.
- The establishment of a connection to the BUS by the LAN Emulation Client.

The LECS Connect and Configuration phases may be bypassed for certain applications. The Registration phase may also be bypassed if the LEC performs required address registration during the Join phase.

The Processes connecting the LEC to the ELAN are shown in Figure 4.

Figure 4 Connection Processes of the LEC to LE Server

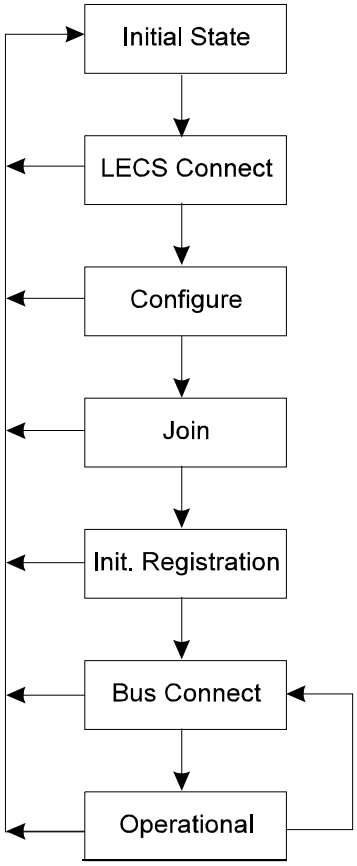

Registration The address registration function is the mechanism by which LECs provide address information to the LAN Emulation Server. The LAN destinations may also be unregistered as the state of the client changes. A client must either register all LAN destinations for which it is responsible or join as a proxy to other MAC addresses.

Address Resolution Address resolution is the procedure by which a LEC associates a LAN destination with the ATM address of another LEC or the BUS. Address resolution allows clients to set up data direct VCCs to carry frames (refer to Figure 5).

Figure 5 Address Resolution

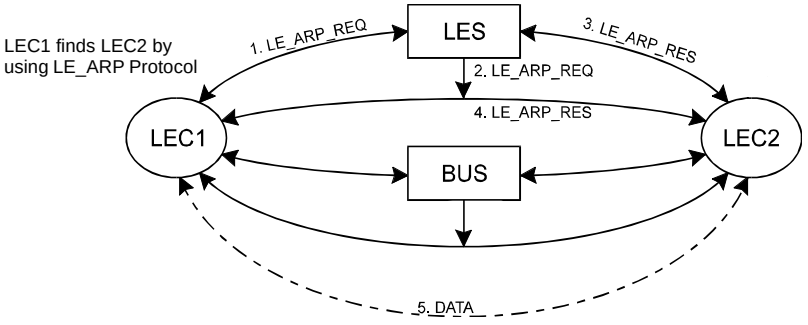

Connection Management

In Switched Virtual Connection (SVC) environments, the LAN Emulation entities (LEC, LES and BUS) set up connections between each other using UNI signaling.

LAN Emulation Components in Your Network

Each Emulated LAN consists of a single *LANE Service*, and a number of LAN Emulation clients.

A LANE Service consists of:

- A *LAN Emulation Server (LES)*
- A *Broadcast and Unknown Server (BUS)*
- Optional *LAN Emulation Configuration Server (LECS)*.

Figure 6 shows a logical view of a typical ELAN.

Figure 6 LAN Emulation Components

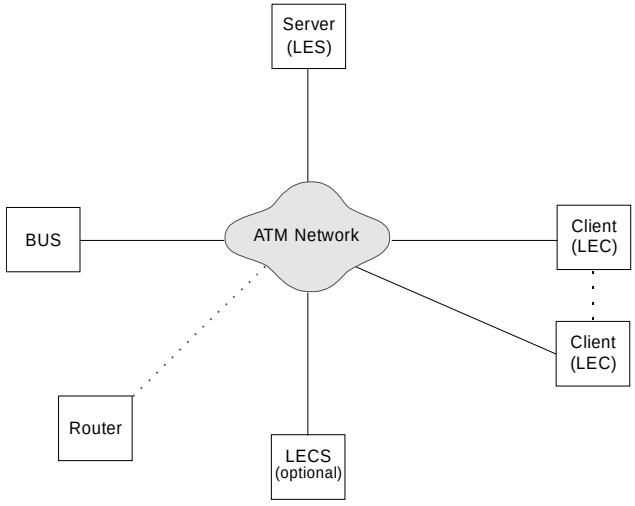

The router shown in Figure 6 is not a LAN Emulation component, but would be required should a device on one Emulated LAN need to communicate with a device on another Emulated LAN.

You may wish to have more than one LECS on your network for security reasons (e.g. isolate one data source from others). For example, you may wish the Finance department to be controlled by one LECS and the rest of your network to be controlled by a different LECS.

LAN Emulation and 3Com Devices

LAN Emulation components are implemented in ATM devices. The LAN Emulation standards do not specify how each vendor implements each of these components.

3Com provides a wide range of ATM equipment, and the following example is just one way in which you can implement an Emulated LAN using 3Com devices.

An Example

- The CoreBuilder® 7000/9000 incorporates the BUS, LES and LECS components. These components are known collectively as *LANE Services*.
- The SuperStack® II ATM Expansion Module has 16 LAN Emulation Clients (LECs); one for each of the *Virtual LANs (VLANs)* it supports.

Joining the ELAN

Before a LAN Emulation Client (LEC) can transmit any Ethernet frames onto the ATM network it must first join an ELAN. To join the ELAN:

1. The LEC must know the name of the ELAN it is to join.

   The ELAN name is specified through the management software on the Switch.

2. The LEC must communicate with the LAN Emulation Server (LES) that is serving that ELAN.

   To communicate with the LES, the LEC must first locate the LES. The LEC can find the ATM address of the LES in one of the following ways:

   - If there is a LAN Emulation Configuration Server (LECS) on the network, the LEC gets the address of the LES from the LECS.

   The way in which the LECS determines which LES the LEC needs to communicate with, depends on the *policy* that the LECS is running. Refer to the user guide that accompanies your LECS for more details of the policies your LECS uses.

   - If the network does not have a LECS, the LEC gets the LES address from the management software on the ATM device.

3. The LEC must have a connection to the Broadcast and Unknown Server (BUS).

   When the LEC has joined the LES, the LES helps the LEC locate the *Broadcast and Unknown Server* (BUS) associated with that ELAN.

   Locating the LECS

   Before the LEC can ask the LECS for the address of the LES, the LEC must first locate the LECS. There are three ways in which the LEC can locate the LECS, and the LEC tries these methods in the following order:

   - The LEC can ask the adjacent ATM Switch using the *Interim Local Management Interface (ILMI)*.
   - The LEC can use a well known ATM address that is reserved for the LECS. The well known address is pre-programmed into most LECS devices. The well known address is:

     47007900000000000000000000:00A03E000001:00

- The LEC can use a reserved *Permanent Virtual Circuit (PVC)* which the ATM Switch has already routed to the LECS. The reserved PVC is VPI 0, VCI 17.

Mapping Ethernet and ATM Addresses

Each device connected to an Ethernet port has one or more MAC addresses.

Each ATM device has a number of LAN Emulation clients, and each *LAN Emulation Client (LEC)* has an ATM address. An example of this is shown in Figure 7.

Figure 7 LAN Emulation Clients and Ethernet Hosts

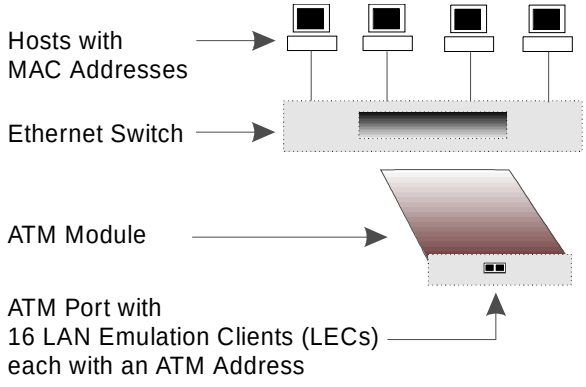

These clients represent (act as a proxy) for devices connected to the Ethernet ports.

Whenever an Ethernet device wants to communicate with another device over the ATM network, the LEC must first discover the ATM address of the LEC that is acting as a proxy for the destination MAC address. The LEC must do this for each unicast Ethernet frame sent. The process is known as *Address Resolution.*

Address Resolution

The process by which a LEC associates a LAN destination address with the ATM address of another LEC (or the BUS) is known as *Address Resolution*.

Each LEC keeps a LAN Emulation *ARP Table* (which should not to be confused with the IP ARP Table). The ARP Table lists the remote

destination MAC addresses and the ATM address of the LEC through which each destination MAC address can be reached.

Prior to sending a frame with a known destination, the LEC checks the ARP Table to see if the destination MAC address of the frame is listed in the ARP Table. The action the LEC then takes depends on whether the MAC address is listed in the ARP Table:

- If the destination MAC address is listed in the ARP Table:
  - and there is an ATM connection to that LEC, the frame is sent directly to that LEC.
  - and an ATM connection has not already been set up, the LEC sets up an ATM connection.
- If the destination MAC address is not listed in the ARP Table:

  the LEC sends the frame to the BUS. The BUS then sends the frame to all LECs on the Emulated LAN.

Sending a frame to every LEC is an inefficient use of resources, so the LEC also tries to locate the MAC address for future use.

To discover the correct address, the LEC uses a process called *LAN Emulation Address Resolution Protocol (LE_ARP)*.

LAN Emulation Address Resolution Protocol (LE_ARP)

An LE_ARP request is sent to the LES to locate the destination MAC address. The LES in turn sends the LE_ARP request to all of the LECs in the Emulated LAN.

LECs represent (act as a proxy for) MAC address devices connected to the Ethernet ports. When a LEC receives an LE_ARP request it checks whether the MAC address is on its Switch. It does this by checking the entries in the Switch database.

If the MAC address belongs to one of the devices connected to an Ethernet port, the LEC sends an LE_ARP response to the LEC that sent the original LE_ARP request.

The LEC that sent the LE_ARP request adds this information to its ARP Table. The LEC then sets up a direct connection through the ATM network to the appropriate LEC, so that subsequent frames are forwarded more efficiently.

What Happens to Unicast Frames?

The path a unicast frame takes through the ATM network depends on whether the location of the destination address is known to the sending LEC.

- If the location of the destination address is **known**, the LEC sets up a direct connection to the LEC serving the destination address.
- If the location of the destination address is **unknown**, a unicast frame is sent to the Broadcast and Unknown Server (BUS); where it is treated in the same way as a broadcast or multicast frame.

In addition the sending LEC attempts to locate the LEC serving the destination address. It does this using the LE_ARP process, described in "LAN Emulation Address Resolution Protocol (LE_ARP)".

What Happens to Broadcast and Multicast Frames?

Each *Emulated LAN (ELAN)* acts as a broadcast domain. When a broadcast or multicast frame is passed to the LEC for transmission, the frame is sent to the *Broadcast and Unknown Server (BUS)*.

When the LEC receives a broadcast, multicast, or unicast frame it checks to see if it originally sent the frame, and then does the following:

- If the LEC sent the frame, it discards the frame.
- If the LEC did not send the frame, the LEC passes the frame to the Ethernet device so that it can be forwarded to the appropriate port(s)



Unlike broadcast and multicast frames, the number of unicast frames that can be sent to the BUS every second is limited so as not to overload the BUS and LECs with too much traffic.

3 NETWORK LAYER CONCEPTS — ATM & ATM ADAPTATION

This guide contains several chapters that describe the basic concepts behind ATM technology, and integrating ATM into your existing network:

This chapter describes the following concepts behind the network layer architecture of a typical ATM network:

- The Layered Network Architecture
- ATM Adaptation Layer (AAL)
- Asynchronous Transfer Mode (ATM) Layer
- Physical Layer

The Layered Network Architecture

Asynchronous Transfer Mode (ATM) is one part of the layered network architecture. This architecture is shown in Figure 8.

Each of the layers is discussed in turn; starting with the Upper Layer and working down to the Physical Layer.

Figure 8 Network Layer Architecture

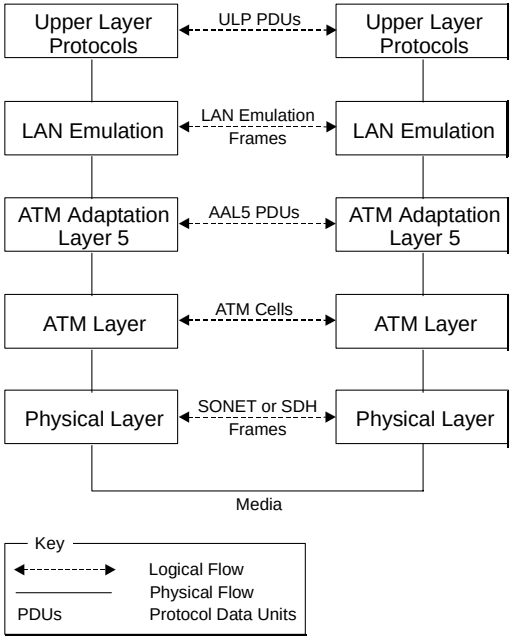

ATM Adaptation Layer (AAL)

Ethernet frames can be between 64 and 1514 bytes in length. ATM transmits data in fixed length *cells*. Each cell contains 48 bytes of user data. The *ATM Adaptation Layer (AAL)* converts data between the Ethernet and ATM formats.

The AAL has a *Segmentation and Reassembly (SAR)* sub-layer that does the conversion.

In the sending device the LEC passes the Ethernet frames to the SAR. The SAR converts the user data into fixed length cells, and passes these cells to the ATM Layer for transmission across the ATM network.

In the receiving device, the SAR converts the ATM cells back into the appropriate user data again, and passes this data to the LEC.

As ATM can carry different traffic types (for example, voice, video, and other data), several Adaptation Layer protocols have been defined. These protocols operate simultaneously within the Adaptation Layer, and allow the ATM Layer to support different applications and traffic types.



The SuperStack® II ATM Expansion Module uses the AAL5 ATM Adaptation Layer protocol, which is a data-oriented protocol. The ATM Expansion Module will only work with other devices using the AAL5 ATM adaptation layer protocol.

Asynchronous Transfer Mode (ATM) Layer

Asynchronous Transfer Mode (ATM) is a connection-oriented transmission protocol that has the following features:

- ATM uses the *Signalling Protocol (Q.2931)* to dynamically create, maintain and clear ATM connections between end-systems.
- ATM uses fixed length packets known as *cells*, and each cell identifies the connection to be used.
- ATM is transparent to the multiple services it supports and can carry cells from different applications over the same physical connection.
- ATM has well-defined user and network interfaces.

ATM Basics

Asynchronous Transfer Mode (ATM) technology transfers network traffic, including voice, video, and data, at high speed. Using this connection-oriented networking technology, centered by a switch, you can set up a great number of virtual connections to support multiple applications through the same physical connection. The switching technology enables dedicated bandwidth for each application, overcoming the problems that exist in a shared-media networking technology, like Ethernet, Token Ring, and FDDI. ATM allows different types of physical layer technology to share the same higher layer — the ATM layer.

ATM uses fixed length packets called *cells*. The ATM cell is defined as 48 bytes of payload and 5 bytes of header information totaling 53 bytes. The header contains enough information to allow the network to forward each cell to its proper destination. The cell header also provides the network with the ability to implement congestion control and traffic management mechanisms.

ATM advantages include the fact that:

- Fixed-length cells offer smaller and more predictable switching delays, because cell switching is less complex than variable-length packet switching.

- Having all the data in the same cell format also dramatically increases the speed of transmission, by eliminating the need for protocol recognition and decoding. A good analogy is containerized shipping, where uniform shape and weight containers with standardized labelling, ease and speed up processing.
- Cell switching is less complex and more reliable. ATM hardware can be implemented more efficiently because control structures, buffers, and buffer management schemes can be designed to known size criteria.
- Cell-relay switches can process cells in parallel, achieving speeds that far exceed the limitations of packet switch architectures.
- The cell format also allows for multi-protocol transmissions. Since ATM is protocol transparent, the various protocols can be transferred at the same time. With ATM, one line can carry phone, fax, video, data and other information simultaneously. This multiprotocol advantage also offers scalability, greatly reducing the configuration changes necessary for adding a new traffic type to your network.

ATM is Service Transparent

ATM allows for the high speed transfer of a wide range of user traffic, including voice, video and other data.

The cell format means that more than one service (traffic type) can be *multiplexed* over the same physical line, see Figure 9.

Figure 9 Service Processing

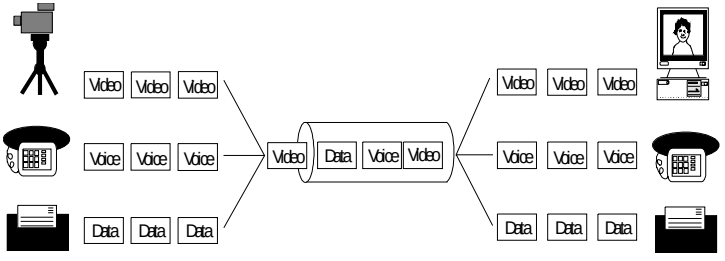

Cells are *de-multiplexed* at the other end of the connection and forwarded to the correct service destination.

Multi-service processing promotes scalability by significantly reducing the number of changes needed to add new service traffic types to your network.

ATM is Connection-Oriented

ATM is a *connection-oriented* transport service that requires a communication channel to be set up between the ATM source and destination end-systems before ATM cells can pass between them.

Before a direct data connection can be set up between two end-systems, a number of control connections are set up. These control connections are beyond the scope of this guide. If you require further information about control connections, refer to the ATM Forum's "LAN Emulation Over ATM" document.

Figure 10 shows the logical structure of a communication channel.

Figure 10 Communication Channels

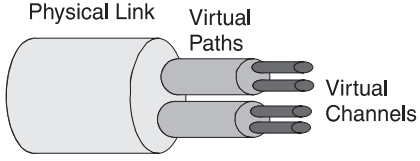

Several communication channels can operate over the same physical link. Each *Virtual Path Connection (VPC)* contains several communication channels known as *Virtual Channel Connections (VCCs)*.

The ATM Expansion Module only manages Virtual Channel Connections (VCC).

A VCC is defined as spanning end-to-end, whereas a *Virtual Channel (VC)* is the name given to a section of the VCC, refer to Figure 11.

Figure 11 Connection Terminology

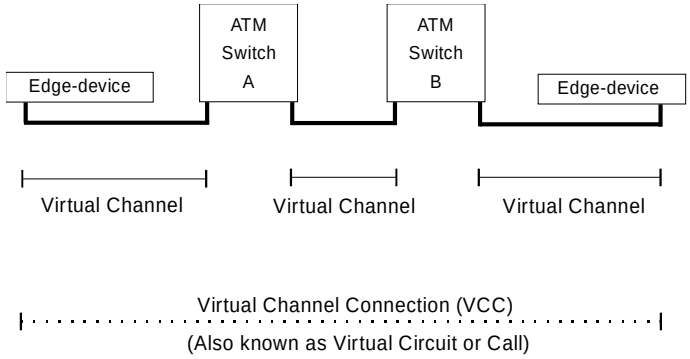

Many virtual channels can exist on the same physical link. Each virtual channel is identified by a pair of numbers:

- The *Virtual Path Identifier (VPI)* and
- The *Virtual Channel Identifier (VCI)*.

Any end-system that wishes to communicate with another end-system must first use the *Signalling* protocol to set up the VCC.

The *Signalling* protocol negotiates with each ATM device between the end-systems to set up a series of virtual channels. Each of these virtual channels is identified using the VPI and VCI values.

Figure 12 shows how ATM cells are switched through the ATM network using the VPI/VCI values.

Instead of containing the ATM address of the final destination device, each cell header contains the VPI/VCI values associated with the virtual channel it is going to take to get to the next ATM Switch in the connection.

Each ATM switch knows that when it receives a cell with a particular VPI/VCI value on one port that it must transmit the cell on another port with another VPI/VCI.

Cells are switched through the network based on these VPI/VCI values, and switching is performed independently for every cell. Each cell can be thought of as taking a virtual channel connection.

The VPI/VCI values are only meaningful in the context of that user-to-switch, or switch-to-switch, interface. Identical VPI/VCI values can exist on different interfaces within the network.

Connections that are established dynamically using the Signalling protocol are known as *Switched Virtual Circuits (SVCs)*. *Switched Virtual Circuits* are described on page 39.

ATM connections can also be established via management, and these type of connections are known as *Permanent Virtual Circuits (PVCs)*. *Permanent Virtual Circuits* are described on page 40.

Figure 12 Switching Cells Using VPI and VCI Values

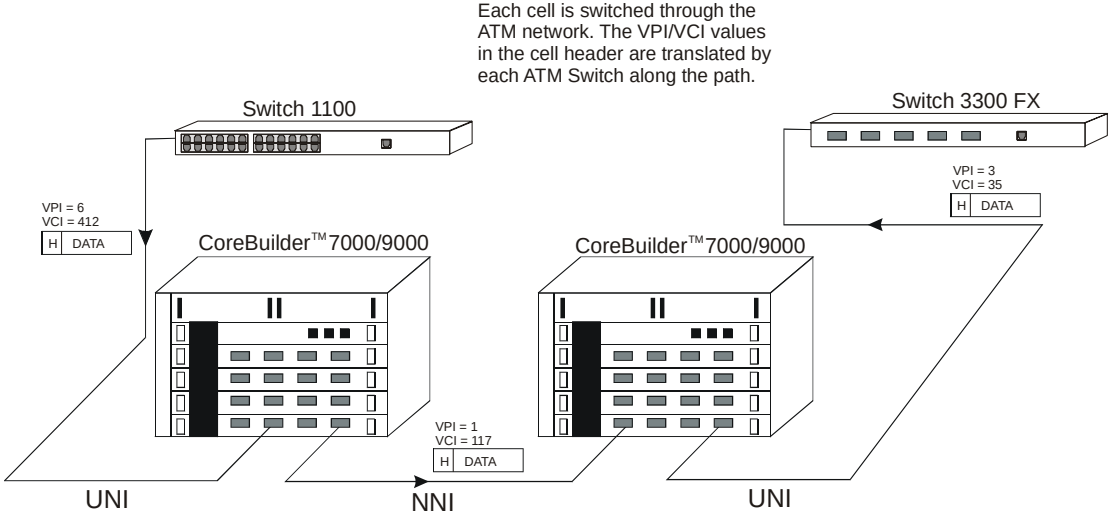

Switched Virtual Circuits (SVCs)

SVCs use the signalling protocol to dynamically define connections as they are needed and to release them when they are no longer needed.

SVCs use signalling for:

- Connections initiated by the user/application.
- Connections established and dropped dynamically.
- Varied connection time.
- Connections not automatically re-established after network failure.

Permanent Virtual Circuits (PVCs)

The most basic connection setup requires the definition of each connection via management. These type of connections generally remain established for long periods of time.

PVC attributes include:

- Connections initiated by network management.
- Long-term connection duration.
- Automatica re-establishment after network failure.
- Support by MIB or other management entity.

The ATM Expansion Module does not support PVCs.

ATM Interfaces

ATM technology is implemented in ATM edge-devices and ATM Switches.

ATM provides a *User-to-Network Interface* (UNI). The User-to-Network Interface (UNI) is used to connect an ATM edge device to an ATM switch that is managed as part of the same network.

ATM also provides a *Network-to-Network Interface (NNI)* that is typically used to interconnect two ATM switches managed as part of the same network.

The ATM Interfaces are shown in Figure 13.

Figure 13 ATM Interfaces

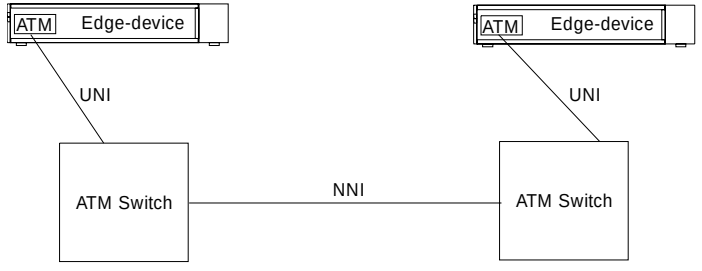

The User-to-Network Interface (UNI) is managed by the *Interim Local Management Interface (ILMI)* protocol.

Interim Local Management Interface (ILMI)

The ATM Forum produced the *Interim Local Management Interface (ILMI)* to increase monitoring and diagnostic facilities, and to provide ATM address registration at the *User-to-Network Interface (UNI)*.

ILMI uses a *Management Information Base (MIB)* and the *SNMP* protocol.

Each device that provides ILMI support contains a *UNI Management Entity (UME)*, which uses SNMP to access management information stored in the ILMI MIB of the adjacent switch, see Figure 14.

Figure 14 UNI Management Entities

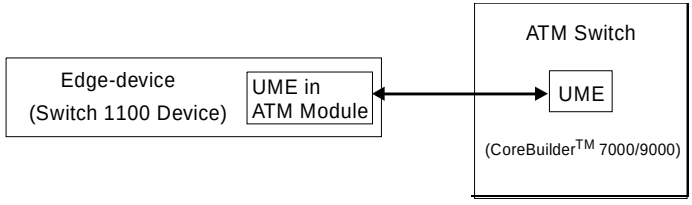

ATM Address Registration

In order to establish an ATM connection, both the user and the network must know the ATM addresses used at that *User-to-Network Interface (UNI)*. An example of an ATM address is shown below.

47007900000000000000000000:00A03E000001:00

An ATM address consists of three sections of information and is 20 bytes in length:

network:host:identifier

Where **network** is a network prefix assigned to the device by the ATM Switch, and is 13 bytes long.

Where **host** is the edge-device identifier, and is 6 bytes long.

Where **identifier** identifies the client within the edge-device, and is 1 byte long.

ILMI provides a mechanism for the edge-device (in this case the ATM Expansion Module) to inform the ATM Switch of the addresses it represents.

When the ATM Expansion Module initializes, the ATM Switch sends a network prefix to the ATM Expansion Module. The ATM Expansion Module then tries to register itself with the ATM Switch by attaching the prefix to the front of its MAC address, and an identifier to the end of the address. It then sends this back to the ATM switch. If acceptable, the ATM Switch registers the address as the ATM Expansion Module's ATM address.

The ATM Layer and Cell Structure

This section describes the cell structure, and how the ATM Layer uses the information stored in the cell header to perform each of its tasks.

The ATM Layer's primary responsibility is to manage the sending and receiving of cells between the user and the network.

The ATM Layer accepts the user data and control information from the ATM Adaptation Layer, adds the cell header, and passes the resulting 53 byte cell to the physical layer.

In addition, it also receives cells from the physical layer, strips off the cell header and passes the remaining 48 bytes to the higher layer protocols.

The ATM cell has 48 bytes of payload (information to be carried) and five bytes of header information, making the cell 53 bytes in length.

The cell header contains the information used by the network to forward each cell to its destination. The ATM cell structure is shown in Figure 15.

Figure 15 ATM Cell Structure

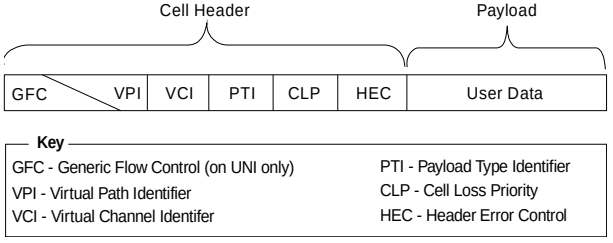

The ATM cell header consists of the following fields:

Generic Flow Control (GFC) — Provides local functions, such as flow control over the *User-to Network Interface (UNI)*. The value encoded in the GFC is not carried end-to-end and can be overwritten by the ATM Switch.

Virtual Path Identifier (VPI) and Virtual Channel Identifier (VCI) — The VPI/VCI values allow the network to associate a cell with a given connection, so that the cell can be switched to its destination.

Payload Type Identifier (PTI) — The PTI is used to indicate whether the cell contains user information, or management information. The management information is used for resource and network congestion management.

Cell Loss Priority (CLP) — The purpose of the Cell Loss Priority (CLP) bit in the ATM cell is to indicate that cells with this bit set should be discarded before cells which do not have the CLP bit set. Cells can be discarded based on CLP condition and according to the network load. When the network overloads, a discard mechanism, based on the value of the CLP bit in the cell header, may come into operation.

Header Error Check (HEC) — The HEC field is used for detecting bit errors in the cell header. It is also used for cell delineation, defining where the cell begins in a SONET frame.

Physical Layer

The physical layer is responsible for transmitting and receiving ATM cells over a physical medium. It is also responsible for checking the integrity of the bits being transferred over a physical media, and for making sure that they are error-free.

The ATM Expansion Module is compliant with both *SONET STS-3c* and *SDH STM-1* physical layer standards.

These standards are similar, and most devices allow you to use either framing standard on each link in the ATM network.The same framing standard must be used at each end of the link.

Many users prefer to use the same framing standard throughout their network (for example SONET STS-3c).

The physical layer is sub-divided into:

- Path — SONET and SDH are capable of carrying traffic for a number of uppers layers, and ATM is only one of those layers. Each upper layer uses its own Path through the SONET/SDH layer.
- Line — A *line* is the whole path between one ATM device and the adjacent ATM switch or ATM end-station.

4 VIRTUAL LAN CONCEPTS

This chapter provides a brief overview of *Virtual LAN (VLAN)* concepts, and describes how to extend VLANs into the ATM network.



This user guide does not describe how to create or configure VLANs. VLAN configuration is described in the user guide that accompanies your Switch.

What is a Virtual LAN (VLAN)?

A *Virtual LAN (VLAN)* is a flexible, location and topology independent group of devices that can be located anywhere in a network, but they communicate as if they are on the same physical segment. With VLANs, you can segment your network without being restricted by physical connections — a drawback of traditional network design. As an example, with VLANs you can segment your network according to:

- Departmental groups — For example, you can have one VLAN for the Marketing department, another for the Finance department, and another for the Development department.
- Hierarchical groups — For example, you can have one VLAN for directors, another for managers, and another for general staff.
- Usage groups — For example, you can have one VLAN for users of e-mail, and another for users of multimedia.

Benefits of VLANs

The main benefit of VLANs is that they provide a network segmentation system that is far more flexible than any traditional network. Using VLANs also provides you with three other benefits:

- It eases the change and movement of devices on IP networks

With traditional IP networks, network administrators spend much of their time dealing with moves and changes. If users move to a different IP subnet, the IP addresses of each endstation must be updated manually.

With a VLAN setup, if an endstation in VLAN 1 is moved to a port in another part of the network, you only need to specify that the new port forwards VLAN 1 traffic.

- It provides extra security

Devices within each VLAN can only communicate directly with devices in the same VLAN. If a device in VLAN 1 needs to communicate with devices in VLAN 2, the traffic needs to pass through a routing device or Layer 3 switch.

- It helps to control broadcast traffic

With traditional networks, congestion can be caused by broadcast traffic that is directed to all network devices whether they require it or not. VLANs increase the efficiency of your network because each VLAN in a broadcast domain can be set up to contain only those devices that need to communicate with each other.

VLANs and Your Switch

Your Switch provides the following VLAN features:

- Support for up to 16 VLANs using the IEEE 802.1Q standard

  The IEEE 802.1Q standard allows each port on your Switch to:

  - Be placed in any single VLAN defined on the Switch.
  - Be placed in several VLANs at the same time using 802.1Q tagging.
  - Use 802.1Q learning — A system that uses the GARP VLAN Registration Protocol (GVRP) to enable the Switch to learn the VLAN requirements of the endstations attached to each port, and place the relevant ports in those VLANs automatically.
  - Forward traffic for VLANs that are unknown to the Switch.

  The standard requires that you define the following information about each VLAN on your Switch before the Switch can use it to forward traffic:

  - *VLAN Name* — This is a descriptive name for the VLAN (for example, Marketing or Management).
  - *802.1Q VLAN ID* — This is used to identify the VLAN if you use 802.1Q tagging across your network.
  - *Local ID* — This is used to identify the VLAN within the Switch, and corresponds to the VLAN IDs used in legacy 3Com devices.

- Support for VLT tagging

  VLT (Virtual LAN Trunk) tagging is a proprietary 3Com system that allows a port to be placed in all the VLANs defined for your Switch.

The Default VLAN

A new or initialized Switch contains a single VLAN, the Default VLAN. This VLAN has the following definition:

- VLAN Name — Default VLAN
- 802.1Q VLAN ID — 1
- Local ID — 1

All the ports are initially placed in this VLAN, and it is the only VLAN that allows you to access the management software of the Switch over the network.

Defining New VLANs

If you want to move a port from the Default VLAN to another VLAN, you must first define information about the new VLAN on your Switch. To do this, you use the VLAN Setup page of the web interface; see "VN Configuration Menu" on page 98.

Placing a Port in a Single VLAN

Once the information for a new VLAN has been defined, you can place a port in that VLAN. To do this, use the Untagged VLAN listbox on the Port Setup page of the web interface; see "Port Submenu [2,1]" on page 94.

Placing a Port in Multiple VLANs

Your Switch supports VLAN tagging, a system that allows traffic for multiple VLANs to be carried on a single link. Two methods of VLAN tagging are supported: *802.1Q tagging* and *VLT (Virtual LAN Trunk) tagging*.

802.1Q Tagging

This method of tagging is defined in the IEEE 802.1Q standard, and allows a link to carry traffic for any of the VLANs defined on your Switch. 802.1Q tagging can only be used if the devices at both ends of a link support IEEE 802.1Q.

To create an 802.1Q tagged link:

1 Ensure that the device at the other end of the link uses the same 802.1Q tags as your Switch.

2 Place the Switch port in the required VLANs using the VLAN Setup page of the web interface.

3 Place the port at the other end of the link in the same VLANs as the port on your Switch.



You cannot create an 802.1Q tagged link with ports that already use VLT tagging (see VLT Tagging below).

VLT Tagging

This method of tagging is a proprietary system developed by 3Com, and allows a link to carry traffic for all the VLANs defined on your Switch. VLT tagging can only be used on links to legacy 3Com devices.

To create a VLT tagged link:

1 Specify that the port is a VLT port using the VLT listbox on the Port Setup page of the web interface.

2 Specify that the port at the other end of the link is a VLT port.



You cannot create a VLT tagged link with ports that already use 802.1Q tagging.



A VLT tagged link only carries traffic for VLANs defined on your Switch. In legacy 3Com devices, a VLT tagged link carries traffic for all VLANs automatically.

Using IEEE 802.1Q Learning

If an endstation supports IEEE 802.1Q, it can be configured to inform your network that it is to receive traffic for specific VLANs. If your Switch units have IEEE 802.1Q learning enabled, they can do the following:

- Automatically place the endstation in those VLANs.
- Automatically ensure that the required VLAN traffic can always reach the endstation from anywhere in the network.

The system works as follows:

1. The configured 802.1Q endstation sends out a packet with a known multicast address to the whole network — this packet declares that the endstation is to receive traffic for specific VLANs.
2. When the packet arrives at a port on a Switch with 802.1Q learning enabled, the Switch places the receiving port in the VLANs specified and then forwards the packet to all other ports.
3. When the packet arrives at another Switch with 802.1Q learning enabled, it also places the receiving port in the VLANs specified and forwards the packet to all other ports. In this way the VLAN information is propagated throughout the network, and the required VLAN traffic can always reach the endstation from anywhere in the network.



For information about configuring IEEE 802.1Q functionality on an endstation, refer to the user documentation supplied with your endstation or the endstation's Network Interface Card (NIC).

Connecting VLANs to Other VLANs

If the devices placed in a VLAN need to talk to devices in a different VLAN, each VLAN requires a connection to a routing or Layer 3 switching device. Communication between VLANs can only take place if they are all connected to a routing or Layer 3 switching device.

Connecting to VLANs on Legacy Switch Units

Your Switch supports VLANs using the IEEE 802.1Q VLAN standard, however legacy Switch units (for example, the SuperStack II Switch 1000) do not use this system. If you want to connect the VLANs on your Switch to the VLANs on legacy Switch units, note the following:

- You must define all the VLANs used by the legacy Switch units on your Switch; it only forwards traffic for legacy VLANs that are defined. When defining the VLANs, the Local ID on your Switch corresponds to the VLAN ID on the legacy Switch units.
- If your legacy Switch units use multiple VLANs, all connections between your Switch and the legacy Switch units must use VLT tagging. If your legacy Switch units use a single VLAN, the connections between your Switch and the legacy Switch units can be untagged.
- All ports on your Switch that are connected to legacy Switch units must have 802.1Q learning disabled.
- Do not define VLAN 15 on your Switch if the legacy Switch units use AutoSelect VLAN Mode.

- Do not define VLAN 16 on your Switch if the legacy Switch units use the Spanning Tree Protocol.

For examples of connecting VLANs on your Switch to VLANs on legacy Switch units, see "Connecting to a Legacy Network" on page 53.

VLAN Configuration Examples

This section contains examples of how you can use your Switch in a VLAN-based network.

Using Untagged Connections

The example shown in Figure 16 illustrates two Switches 3300 connected to endstations and servers using untagged connections. Three ports of the left switch belong to VLAN 1, and another three of the right switch belong to VLAN 2. VLANs 1 and 2 are completely separate and cannot communicate with each other.

Figure 16 Using Untagged Connections

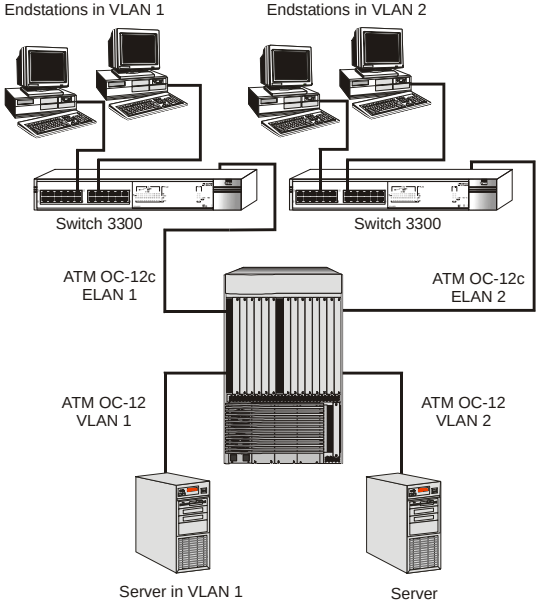

To set up the configuration shown in Figure 16:

1. Use the VLAN Setup page of the web interface to define VLAN1 on the left switch 3300, as well as VLAN 2 on the right switch.
2. Use the Untagged VLAN listbox on the Port Setup page of the web interface to:
   - **a** Place the three ports of the left Switch 3300 in VLAN 1.
   - **b** Place the three ports of the right Switch 3300 in VLAN 2.
3. Map VLAN 1 to ELAN1 and VLAN2 to ELAN2 via the ATM Expansion Module.

Using 802.1Q Tagged Connections

The example shown in Figure 17 illustrates two Switches 3300 and a CoreBuilder 9000 connected using 802.1Q tagged connections.

- On the left Switch 3300, three ports are 802.1Q tagged and belong to VLANs 1, 2 and 3, for which two endstations are configured. The ATM module is configured to map VLANs 1, 2, 3, 4, 5, and 6 to ELANs 1, 2, 3, 4, 5, and 6..
- On the right Switch 3300, three ports are 802.1Q tagged and belong to VLANs 4, 5 and 6, for which two endstations are configured. The ATM module is configured to map VLANs 1, 2, 3, 4, 5, and 6 to ELANs 1, 2, 3, 4, 5, and 6.
- On both the left and right Switches 3300, a server is connected to a certain port which is 802.1Q tagged and belongs to VLANs 1, 2, 3, 4, 5 and 6 for which the server is configured.
- VLANs 1 to 6 can communicate using an external Layer 3 Switch.

Figure 17 Using 802.1Q Tagged Connections

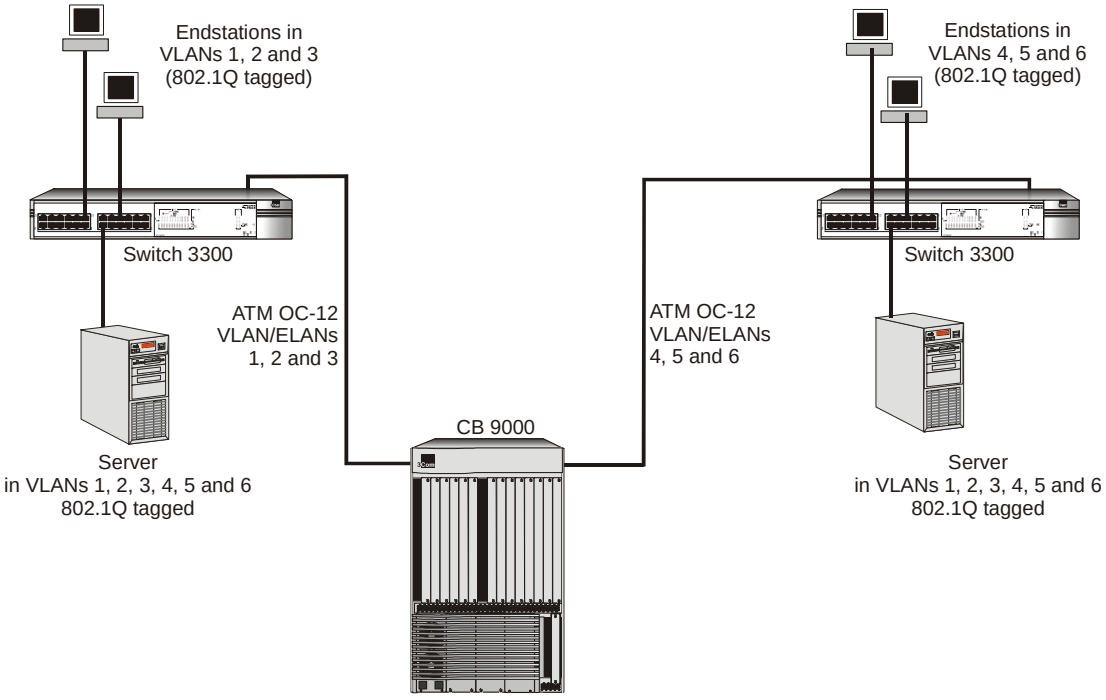

To set up the configuration shown in Figure 17:

1. Configure VLANs on the left Switch 3300:
   - **a** Use the VLAN Setup page of the web interface to define VLANs 1, 2, 3, 4, 5, 6.
   - **b** Assign the appropriate endstation ports to VLANs 1, 2, and 3.
   - **c** Configure the server port for VLANs 1, 2, 3, 4, 5, and 6 (802.lQ tagged).
   - **d** Set the ATM Expansion Module to map VLANs 1, 2, 3, 4, 5, and 6 to ELANs 1, 2, 3, 4, 5, and 6.
2. Configure the VLANs on the right Switch 3300:
   - **a** Use the VLAN Setup page of the web interface to define VLANs 1, 2, 3, 4, 5, 6.
   - **b** Assign the appropriate endstation ports to VLANs 4, 5, and 6.

c Configure the server port for VLANs 1, 2, 3, 4, 5, and 6 (802.lQ tagged).

d Set the ATM Expansion Module to map VLANs 1, 2, 3, 4, 5, and 6 to ELANs 1, 2, 3, 4, 5, and 6.

3 Configure the CoreBuilder 9000. Refer to the chapter on ELAN configuration in the CoreBuilder Cell Switch User Guide.

Connecting to a Legacy Network

The example shown in Figure 18 illustrates a Switch 3300 that has been connected to a legacy network using a VLT tagged link:

- The legacy network supports two VLANs (VLANs 1 and 2), and these can communicate using the connections (one per VLAN) between the Switch 3000 10/100 and the server.
- The server attached to the right Switch 3300 use 802.1Q tagging and belong to VLANs 1 and 2. They can communicate directly with all the endstations attached to the Switch 3000.

To set up this configuration:

1 Configure VLANs 1 and 2 on the two Switches 3300:

a Use the VLAN Setup page of the web interface to define VLANs 1 and 2. Note that the Local ID of the VLAN corresponds to the VLAN ID on the legacy network (Switch 3000) — therefore the Local ID of VLAN 1 must be 1, and the Local ID of VLAN 2 must be 2.

b Use the Port Setup page of the web interface to specify that the connected port of the left Switch 3300 uses VLT tagging.

c Set the ATM Expansion Module to map VLANs 1 and 2 to ELANs 1 and 2.

2 Connect the port on the left Switch 3300 to port 1 on the Switch 3000 10/100.

Figure 18 Connecting to Legacy VLANs Using VLTs

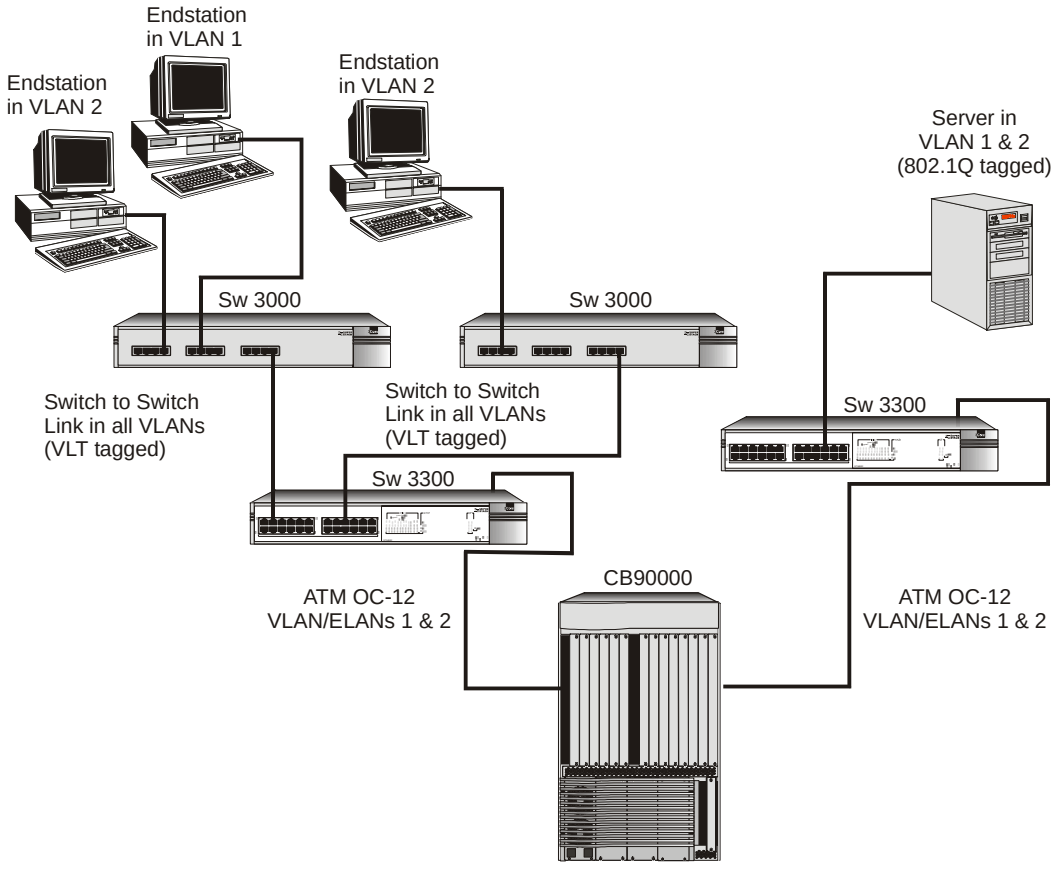

To configure the Switch 1100, Switch 3300, Switch 3000 10/100 and CoreBuilder 9000, refer to the user documentation supplied with them.

Extending VLANs into the ATM Network

You can use LAN Emulation to define and extend VLANs seamlessly through the ATM network, as shown in the example in Figure 20.

Traffic from one *Emulated LAN (ELAN)* is not seen on another ELAN as they are logically separate domains. For this reason, when you plan your network, you should consider what ELANs you require, and how the VLANs will map to these ELANs.

The ATM Module has a LEC for each of the Switch's 16 VLANS, and each VLAN/LEC can be mapped onto an *ELAN*. In this way, Ethernet traffic is mapped to an ELAN by a VLAN-to-LEC association. The mapping of VLANs to ELANs is shown in Figure 19.

When an Ethernet device attached to a Switch generates traffic, the Switch forwards the frames to the appropriate port.

A unicast frame is only forwarded to a port if the address of the destination device is known to be on that port and the destination port is in the same VLAN as the source port. If a unicast frame is forwarded to the ATM port, the ATM port uses the destination MAC address to identify the ATM connection to use.

A broadcast or multicast frame is forwarded to all ports in the same VLAN as the source port. If a frame is received by the ATM port, the ATM port forwards it to the BUS for the associated VLAN.

Figure 19 VLAN to ELAN Mapping

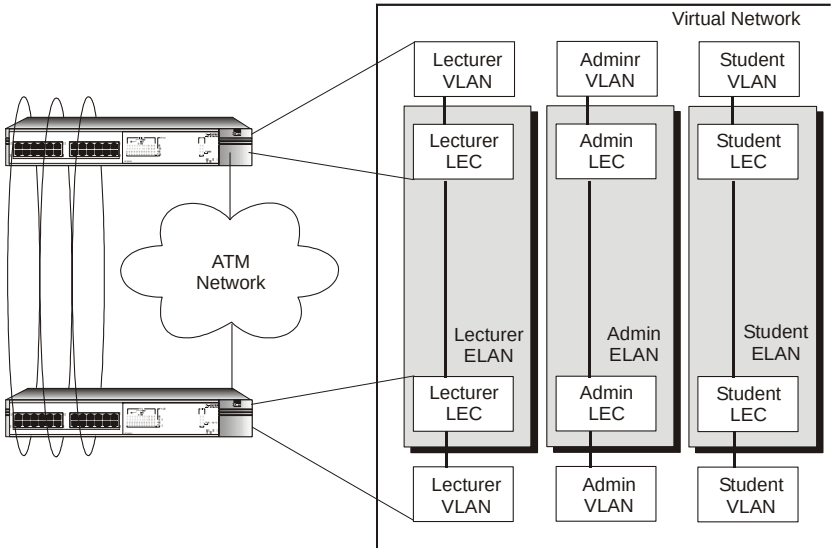

Figure 20 Extending VLANs into the ATM Network.

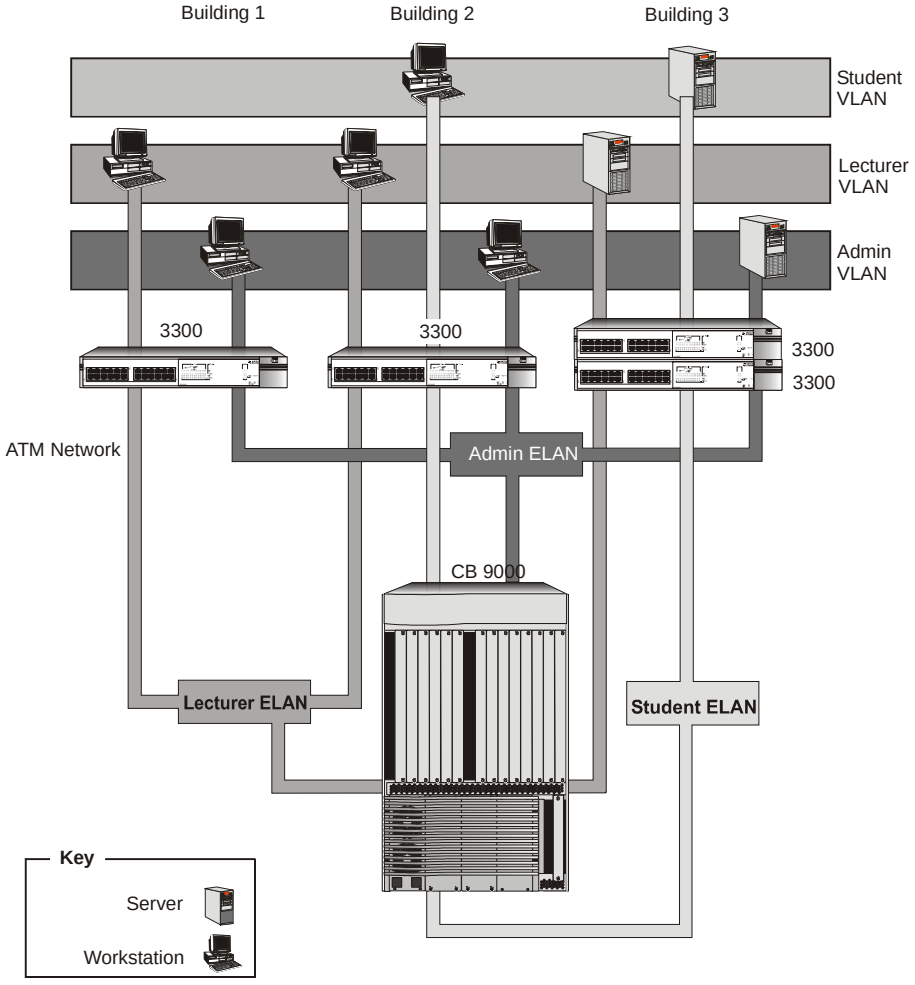

5 Putting Your ATM Network Together

This chapter takes you through the process of planning your network. Topics include:

- Planning Your Network
- ATM Configuration Rules
- Extending VLANs Through the ATM Network
- ATM Connections Within Your Network

Planning Your Network

Before installing your ATM devices you should spend some time planning your network structure. This section lists some of the points you should consider.

- Are routes defined within your ATM network so that your ATM devices can connect to your LAN Emulation services?

Examine your existing network topology and decide if further configuration is required. In particular, you should consider the location of your LAN Emulation services.

- Does your existing ATM network have sufficient resources?

Consider the capacity of:

  - Your ATM Switches, and the number of additional connections your ATM device requires.
  - Your LAN Emulation services, and the number of additional *LAN Emulation Clients (LECs)* your ATM edge-device will attempt to join.

- Can your ATM devices communicate with each other?
  - Ensure that all of your ATM equipment is using the same line framing and signalling protocols.
  - Ensure that all inter-switch routes are configured correctly.

- How do you intend to manage the ATM network?

Can the network manager communicate with the ATM devices you wish to manage? Check the routing tables.

- Does your network meet safety specifications?

You should always follow safety requirements and ensure that your device environment meets all technical specifications.



For the ATM Expansion Module these requirements are specified in Appendix A, Safety Information. For other devices, refer to the user guides that accompany those devices.

- Does your network conform to the ATM configuration rules?

Make sure that your network meets the configuration rules described in Chapter 9 on page 95.

ATM Configuration Rules

There are several things that you should consider before configuring your network:

- Your cables and equipment must meet all of the technical specifications.

The ATM cable you connect to the ATM Expansion Module, must conform to the Multi-Mode Fiber (MMF-PMD) standard defined by ANSI x.3-166-1992.

3Com supports two cable technologies - optical and SDH- and design-performances of two types of fiber cable, multi-mode and single-mode.

3Com supports 62.5/125mm multi-mode fiber (MMF-PMD) cable. The maximum inter-station distance (including device-to-network connectors) should not exceed 500 m (0.31 miles).

- Allow for attenuation (weakening of signal) when calculating cable lengths.
- Ensure that you have sufficient bandwidth.

Refer to Appendix B, ATM Expansion Module Technical Specifications for more details.



You cannot connect a SuperStack® II ATM Expansion Module to another SuperStack II ATM Expansion Module; this is due to the signalling

requirements used by ATM and LANE. There must be a standards-based ATM Switch between the two ATM Expansion modules for them to operate correctly.

Extending VLANs Through the ATM Network

When setting up VLANs and extending them into the ATM network you should consider the following:

- What logical network domains, VLANs, do you wish to set up?

Traffic from one *Emulated LAN (ELAN)* will not be seen on another ELAN (unless a router is used), as they are logically separate domains. For this reason you should consider:

  - What ELANs you require.
  - How the VLANs will map to the ELANs.
  - If you need to route between any of your ELANs.

- Will you have sufficient ELAN resources?

  When calculating the resources you require, you should consider the number of:

  - ELANs that your LAN Emulation services can support.
  - VLANs/ELANs that each edge-device can support.
  - Virtual circuits required.
  - MAC addresses that can be held in the device LAN Emulation ARP Table.

When a *LAN Emulation Client (LEC)* joins an ELAN, up to five control connections may be required before any data is transferred over a separate data connection (VCC). Each time a LEC connects to another LEC a further connection is required. You should keep this in mind when calculating the number of connections you require.

The ATM Expansion Module provides the following resources:

- Up to 16 LECs to extend VLANs into the ATM network over ELANs.
- 8000 Virtual Circuits to/from the ATM network.
- 8000 remote MAC Addresses.



The ATM Expansion Module supports only 16 LECs, but this does not limit your network to 16 ELANs.

- Are the LAN Emulation services configured correctly?

Is the LAN Emulation service that the *LAN Emulation Client (LEC)* is going to join configured correctly?

For example, if your network uses a *LAN Emulation Client Server (LECS)*, does the LECS know about the LES, and is the LES active? Have you supplied a valid ELAN name?



Configuring the LECS and LES is outside of the scope of this user guide. Consult the user guide that accompanies the device implementing the LECS or LES.

Alternatively, if your LEC will not be using a LECS and is being configured manually, ensure that:

- The LES address that the LEC is using has been correctly entered via the local management screens.
- The LES is active.

For the ATM Expansion Module, you can enter settings using the Port Configuration screen described in Chapter 9 on page 94.

ATM Connections Within Your Network

ATM connections in your ATM network can be established dynamically by the *Signalling* protocol (*Switched Virtual Circuit*), or through management (*Permanent Virtual Circuit*).



The ATM Expansion Module does not support PVC connections. All ATM Expansion Module connections are SVCs. This network concepts section includes PVC configuration concepts for completeness.

- Switched Virtual Circuits (SVC) — SVCs are set up dynamically by the signalling protocol. SVCs require very little configuration, and only use the resources you need. For these reasons, SVCs are commonly used in the LAN environment.
- Permanent Virtual Circuits (PVC) — You may need to use a PVC within your network when a remote edge-device does not support *Switched Virtual Circuits*. For example, remote edge-devices in *Wide Area Networks (WANs)* often use PVCs.

6 NETWORK CONFIGURATION EXAMPLES

This chapter provides examples of possible network configurations using the ATM Expansion Module. If you are unfamiliar with ATM, you should read this chapter in conjunction with Chapter 5, *Putting Your ATM Network Together*.

ATM Backbone in the Building

This section gives an example of an ATM backbone within a single building, as shown in Figure 21.

In this case, the Ethernet Switch on each floor is provided with a high speed (155Mbps) full duplex link to the backbone. Using ATM as a backbone technology removes bottlenecks by providing scalable bandwidth, low-latency, high-speed data switching.

Ethernet VLANs can be extended into the ATM network using *Emulated LANs (ELANs)*. Ethernet packets are then switched between Ethernet to ATM transparently.

As well as providing a fast switched backbone between Ethernet LANs, ATM equipped file servers and services may be directly attached to the ATM network; giving improved performance to the Ethernet desktop.

Further advantages are gained in multi-media applications, due to ATM's built-in quality of service.

Figure 21 ATM Backbone in the Building

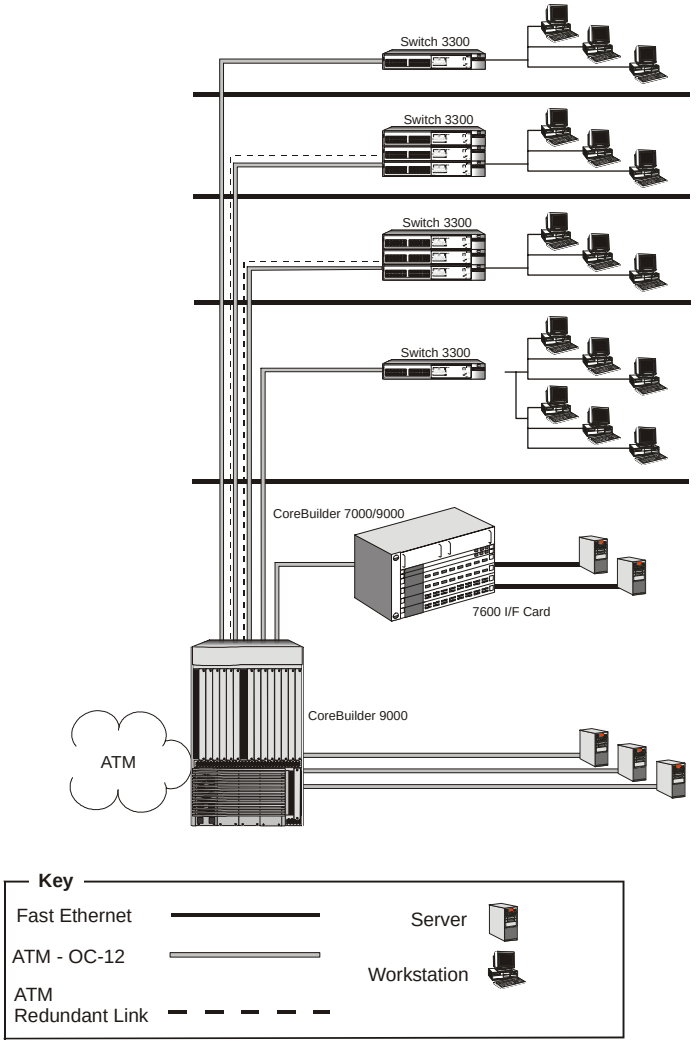

Campus Configuration

The section gives an example of ATM within a campus environment. The diagram shown in Figure 22 demonstrates a balance between cost and performance requirements.

Building A shows how you can concentrate Switch 1100 devices using a Switch 3300. All traffic internal to Building A is switched over Fast

Ethernet. In addition, an ATM link to the campus backbone provides high speed access to remote services.

Building B shows how you can configure a building in a cost efficient manner, while retaining connectivity to the campus ATM network.

Only one ATM Expansion Module is required to connect the SuperStack II Switch 3300 and Desktop Switch devices to the ATM network. This provides connectivity for 48 Ethernet ports to the ATM backbone.

Building C shows you a building similar to Building A, but with additional campus-wide, high performance access to directly connected ATM servers.

Figure 22 Campus and Cost Sensitive Network

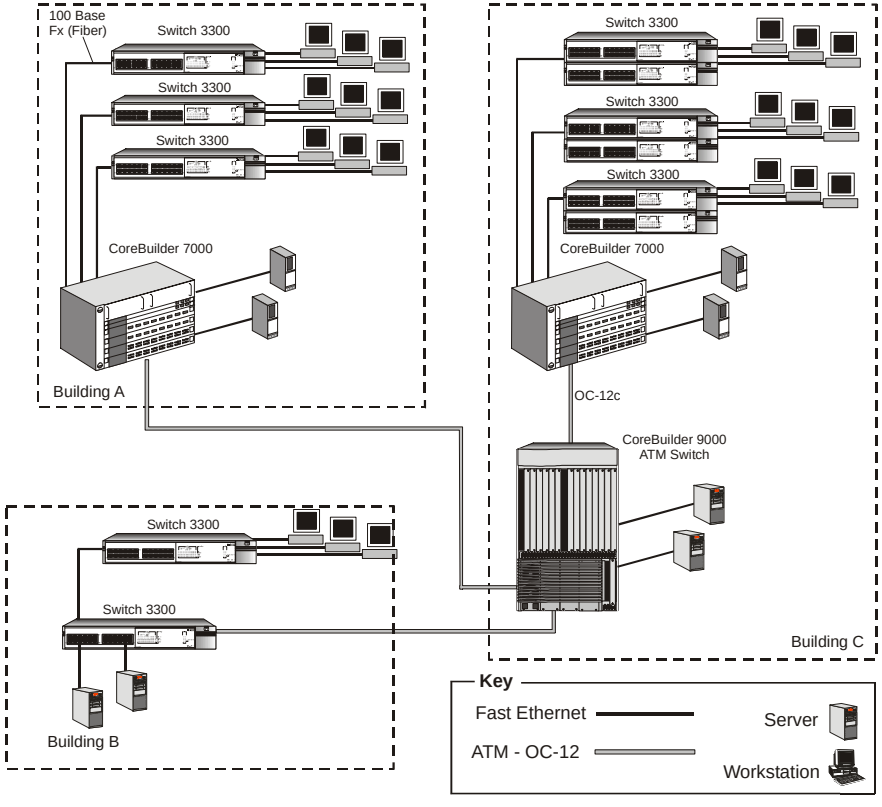

Making a Building Resilient to Network Failure

You can build resilience into your building backbone as shown in Figure 23. The provision of resilient links protects your network against cable and network failure by using a main and a standby link. Should the main link fail, a standby link automatically takes over the function of the main link.

In this example, the ATM Expansion Module OC-12 link provides the main link in the resilient link pair, and the ATM OC-3 fiber link acts as the standby link.

This configuration ensures that all devices have access to a high-speed backbone connection at all times.

Figure 23 Resilient Link Configuration

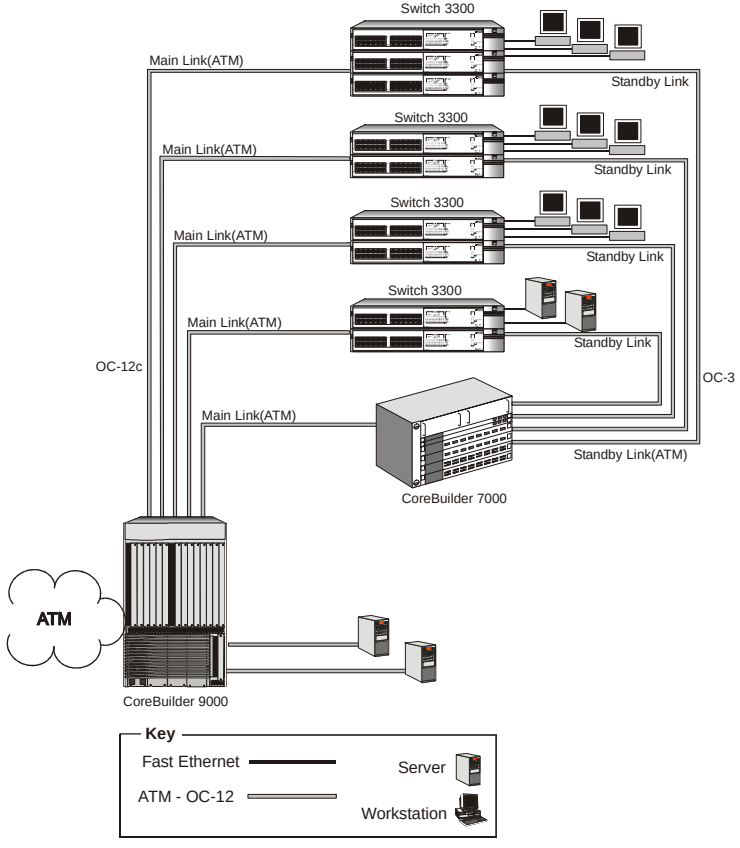

7 INSTALLING AND SETTING UP THE ATM EXPANSION MODULE

Safety Information



***WARNING**: Before installing or removing any components of a device, or carrying out any maintenance work, you must read the safety information provided in Appendix A, "Safety Information". Disconnect the device from the main power supply.*



***AVERTISSEMENT**: Il faut lire les notices de sécurité dans l'appendice A de ce guide avant d'installer ou d'enlever les parties de l'unité ou faire le travail d'entretien. Débrancher la pièce de raccordement d'alimentation.*



***WARNUNG**: Bevor Sie Ein - oder Ausbau des Gerätes vornehmen, butte lessen Sie die Anweisungen in Appendix A genau durch. Das Gerät darf nicht ans Stromnetz angeschlossen sein.*



***WARNING:** Installation and removal of the ATm Expansion Module must be carried out by qualified personnel only. Before installing the ATM Expansion Module into a unit, you must first disconnect the unit from the mains power supply.*



***AVERTISSEMENT:** Confiez l'installation et la dépose de ce module a un personnel qualifie. Avant d'installer ce module dans un group, vous devez au préalable débrancher ce group de l'alimentation secteur.*



***WARNUNG:** Die Installation und der Ausbau des Moduls darf nur durch Fachpersonal erfolgen. Vor dem Installieren des Moduls in einem Gerät muß zuerst der Netzstecker des Geräts abgezogen werden.*



***CAUTION**: Only hold the ATM Expansion Module by the edges to avoid damage from static. Do not touch the top or bottom of the circuit board. If possible, wear a wrist-strap and use an anti-static bag.*

Multi-Mode Module LED Warning

The following warnings apply to the 1100/3300 ATM Expansion Module equipped with multi-mode fiber.



WARNING: *Class 1 LED Product. Do not view the LED through any magnifying device while it is powered on. Never look directly at the fiber Tx port and fiber cable ends when powered on.*



AVERTISSEMENT: Ce produit est un LED classe 1. Ne pas regarder le LED Transmit à travers une loupe lorsque l'appareil est en marche. Ne regardez jamais directement le port Tx a fibres optiques et les embouts de cables a fibres optiques tant qu'ils sont sous tension.



WARNUNG: *LED Produkt der Klasse 1. Schauen Sie nicht durch ein Vergrößerungsgerät direkt auf das übertragende LED, wenn der Strom eingeschaltet ist. Niemals direkt auf den Faser-Tx-Anscluss und auf die Faserkabelenden schauen, warend diese eingeschalter sind.*

Single-Mode Module Laser Warning

The following warnings apply to the 1100/3300 ATM Expansion Module equipped with single-mode fiber.



***WARNING**: The OC-12c/OC-3c Short Reach Modules with Standard Single-Mode cable form a Class 1 Laser Product. Laser radiation when open. Do not stare into beam or view directly with optical instruments. Using optical instruments with this product will increase eye hazard. Do not look into the laser when it is powered on, either with the naked eye or through any magnifying device.*



***CAUTION**: Keep the optical ports of the OC-12c/OC-3c Short Reach Modules terminated with an optical connector or with a dust plug.*

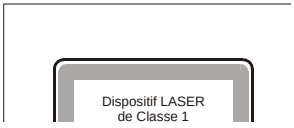

***ATTENTION:** Les modules Short Reach OC-12c/OC-3c dotés de câbles standard Single-Mode sont des produits Laser de Classe 1. Ils émettent un rayonnement laser quand ils sont ouverts. Ne pas regarder directement le rayon, ni l'observer au moyen d'instruments d'optique. Si vous utilisez des instruments d'optique avec ces produits, vous augmentez les risques d'endommager votre vue. Ne regardez pas dans le laser quand il est allumé, que ce soit à l'œil nu ou à travers un instrument grossissant.*



***AVERTISSEMENT:** Obturez les ports optiques des Modules Short Reach OC-12c/OC-3c au moyen d'un connecteur optique ou d'un capuchon de protection anti-poussière.*



***WARNUNG:** Die OC-12c/OC-3c Module mit kurzer Reichweite mit einem Standard Single-Mode Kabel bilden ein Laserprodukt der Klasse 1. Laserausstrahlung wenn offen. Sehen Sie nicht direkt in den Strahl oder*

benutzen zur Überprüfung keine optischen Instrumente. Sehen Sie nicht direkt mit dem bloßem Auge oder mit einem Vergrößerungsgerät in den Laserstrahl, wenn dieser eingeschaltet ist.



VORSICHT: *Halten Sie die optischen Ports der OC-12c/OC-3c Module mit kurzer Reichweite mit einer optischen Verbindung oder einem Schutzstecker abgegrenzt.*

Electromagnetic Compatibility

FCC Statement

This equipment has been tested with a class A computing device and has been found to comply with part 15 of FCC rules. Operation in a residential area may cause unacceptable interference to radio and TV receptions, requiring the operator to take whatever steps are necessary to correct the interference.

CSA Statement

This Class A digital apparatus meets all requirements of the Canadian Interference-Causing Equipment Regulations.

Cet appareil numérique de la classe A respecte toutes les exigences du Règlement sur le matériel brouilleur du Canada.

VCCI Statement

この装置は、情報処理装置等電波障害自主規制協議会（ＶＣＣＩ）の基準に基づくクラスＢ情報技術装置です。この装置は、家庭環境で使用することを目的としていますが、この装置がラジオやテレビジョン受信機に近接して使用されると、受信障害を引き起こすことがあります。
取扱説明書に従って正しい取り扱いをして下さい。

Movie 1 Installing and Connecting the 1100/3300 ATM Expansion Module

Please grant us a few minutes of your time to indicate what you thought of this movie. All you have to do is check off several answer blocks in the questionnaire, feedback.rtf, accompanying this user guide on the CD-ROM, and email the file to the address provided. Thank you.

Information to the User

If this equipment does cause interference to radio or television reception, which can be determined by turning the equipment off and on, the user is encouraged to try to correct the interference by one or more of the following measures:

- Reorient the receiving antenna.
- Relocate the equipment with respect to the receiver.
- Move the equipment away from the receiver.

Plug the equipment into a different outlet so that equipment and receiver are on different branch circuits.

If necessary, the user should consult the dealer or an experienced radio/television technician for additional suggestions. The user may find the following booklet prepared by the Federal Communications Commission helpful:

How to Identify and Resolve Radio-TV Interference Problems

The above booklet is available from the US Government Printing Office, Washington, DC 20402, Stock No. 004-000-00345-4.

In order to meet FCC emissions limits, this equipment must be used only with cables which comply with IEEE 802.3.

Device Support

The ATM Expansion Module allows you to connect your SuperStack® II Switch to an ATM network.

Pre-installation Procedure

This section describes the procedures you need to perform before installing the ATM Expansion Module.

Upgrading Software



*If your Switch does not already have version 2.2 of the Switch software installed, **you must upgrade the Switch software** to version 2.2 **before installing the ATM Expansion Module**.*

To check the version of software installed on the Switch, from the Main Menu of the local management screens, select the STATUS option, and then refer to the upgradable software version number.

If you need to upgrade the software:

1. Obtain the latest version of the software from 3Com's information delivery systems, as described in "On-line Technical Services" on page 115.
2. Follow the instructions in "Upgrading Software" on page 100.

Check the Power Supply

Before installing the ATM Expansion Module ensure that you have sufficient power supply to power the Switch and ATM Expansion Module. Refer to the Release Notes for details about power supplies.

Installation

This section describes how to install the ATM Expansion Module using the example of a SuperStack II Switch 3300 device. Installation is similar for all devices compatible with this ATM Expansion Module.

1. If the Switch is connected to the network, remove power from the switch and disconnect the switch from the main power supply and the network.
2. Place the Switch on a flat, clean, hard, working surface.
3. Locate and remove the blanking plate which covers the ATM Expansion Module slot. Retain the blanking plate and the screws for future use.

   Refer to the manual that accompanies your Switch to locate the slot where the ATM Expansion Module is located.
4. Use the guide rails within the Switch slot to align the ATM Expansion Module. The location of the guide rails and the correct positioning of the ATM Expansion Module is shown in Figure 24.
5. Slide the ATM Expansion Module into the slot without touching the top or bottom of the circuit board. Ensure that the ATM Expansion Module is pushed fully into the unit.
6. Use the thumb screws attached to the ATM Expansion Module to fix the module firmly into place.
7. Connect the Switch to the ATM network as described in "Connecting a Cable to the ATM Port" on page 75.
8. Power up the Switch as described in "Powering Up the Switch" on page 75.
9. Follow the post-installation checks, as described in "Post-Installation Checks" on page 77.

Figure 24 Fitting the ATM Expansion Module

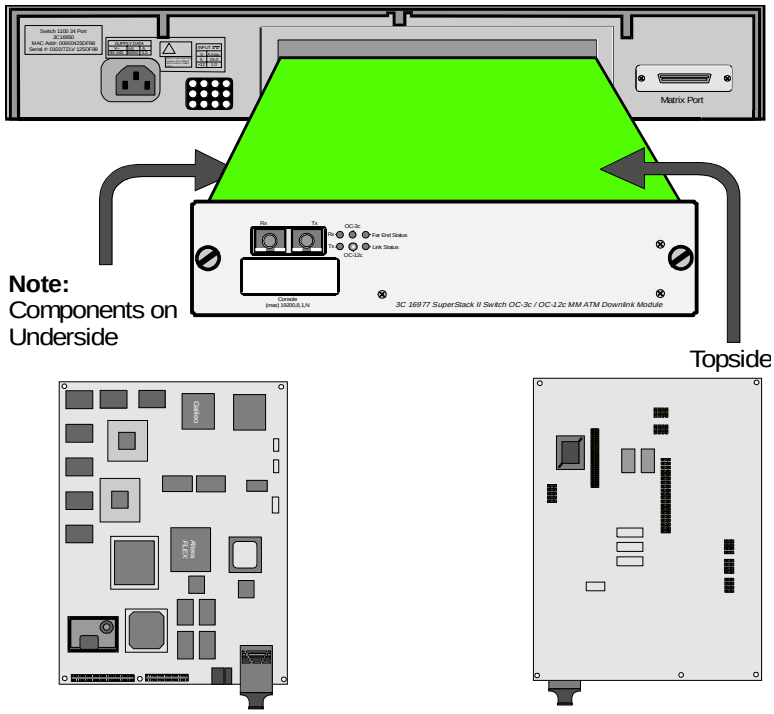

Connecting a Cable to the ATM Port

1 Ensure that the cable you wish to connect to the port meets the correct specification. For cable specifications, refer to "ATM Cable Specification" on page 111.

2 Each end of the fiber cable has a transmit (Tx) and receive (Rx) connector. Connect the Rx connector to the port's Tx socket. Connect the Tx connector to the port's Rx socket. Do the same at the other end of the connection.

Powering Up the Switch

The Switch does not have an On/Off button, so the only way to power up the Switch is to connect it to the main power supply using a power cable.

Connecting a power supply and safety information is described in the user guide that accompanies your Switch.

Power On Self Test (POST)

When powered up, the Switch and ATM Expansion Module enter a *Power On Self Test (POST)*. The type of tests performed depend on how POST has been configured for the Switch. Two types of POST are available:

- **Normal POST** — a basic confidence check which takes between 10 and 20 seconds to complete, and includes:
  - Checksum tests of boot and system areas of *Flash* memory.
  - System memory tests.
  - MAC address verification test.
  - System timer test.
  - *CAM (Contents Addressable Memory)* tests.
  - Console Port tests.
  - Internal packet forwarding tests.
  - Switch and ATM Expansion Module *ASIC (Application Specific Integrated Circuit)* tests.
  - Switch and ATM Expansion Module ASIC memory tests.
  - ATM Expansion Module interface tests.
  - ATM Expansion Module packet forwarding tests.

When a new Switch is powered-up for the first time, it performs a *Normal POST*.

The LEDs used to indicate POST failure and other post-installation checks are described in "Post-Installation Checks" on page 77.

Post-Installation Checks

This section describes the LEDs and basic checks that you can use to verify your installation, and to ensure that the Switch and ATM Expansion Module are operating correctly.

ATM Expansion Module LEDs

This section describes the LEDs that provide status and troubleshooting information. Table 6 lists the ATM Expansion Module LEDs.

Table 6 LEDs on the ATM Module

LED Name	State	Indicates
Link Status	Lit	A link is present on the ATM port, and the port is receiving valid SONET frames.
	OFF	The link is not present on the ATM port.
TX	Lit	The ATM port is transmitting Ethernet, LANE, Signalling or control frames.
	OFF	The ATM port is not transmitting cells.
RX	Lit	The ATM port is receiving data cells.
	OFF	The ATM port is not receiving incoming cells.
OC-12c	Lit OFF	OC-12c speed OC-3c speed
OC-3c	Lit OFF	OC-3c speed OC-12c speed
Far End Status	Lit	The ATM switch has not detected an error on the ATM Expansion Module's transmit link.
	OFF (Link Status LED lit)	The ATM switch at the far end of the connection has detected a problem with the ATM Expansion Module's transmit connection, and notified the ATM Expansion Module. For example, the transmit half of the ATM Expansion Module's cable has been disconnected at either the ATM Expansion Module end or ATM switch end of the connection.
	OFF (Link Status LED OFF)	The cable between the ATM Expansion Module and ATM switch has been disconnected.

SuperStack II Switch Rear Panel LEDs

In addition to the faceplate LEDs of the ATM Expansion Module, two LEDs on the rear panel of the host SuperStack II Switch also indicate aspects of Module/Switch interoperability.

- **Status LED**. When steadily yellow, this LED indicates that a valid ATM Expansion Module is installed; when flashing yellow, that a non-supported Module is installed; and when off, that no ATM Expansion Module is installed.
- **Packet LED:** When steadily yellow, this LED indicates that frames are being transmitted/received on the port; when off, that there is no traffic on the ATM Expansion Module.

Checking the Power Supply

Check the MGMT LED on the Switch. If the MGMT LED is not lit there is a power supply problem. Try the following troubleshooting procedures:

1. Check that the power supply is plugged into the device, using a power outlet that is known to be working.
2. Check that the main power supply switch on the wall is set to the ON position.
3. Check and if necessary change the fuse on the Switch or plug, and then power-up the Switch. Refer to the user guide that accompanies your Switch for details about fuses and safety instructions.
4. Replace the power cable with a cable known to be working, and power-up the Switch.
5. Contact 3Com Technical Support. Refer to "On-line Technical Services" on page 115.

Checking the Physical Connections

This section assumes that the ATM Expansion Module is correctly installed.

Check that the Link Status and Far End Status LEDs on the ATM Expansion Module are lit. If one or both of the LEDs is not lit, there is a problem with the physical connection. Follow the troubleshooting information below:

1. Ensure that both devices are powered-up, and that the ports at both ends of the link are enabled.
2. Ensure that the cable is securely connected to the port at both ends of the link.

3 Check each end of the cable to ensure that each of the fiber connectors is correctly connected. If your cable connectors can be reversed, you may need to reverse the TX and RX cable connectors at one end of the link.



Some cable connectors have been designed so that they cannot be fitted incorrectly. Never use excessive force to connect cables.

4 Remove any objects obstructing the cable and straighten out any kinks in the cable.

5 Check that your cable meets the specifications described in "ATM Cable Specification" on page 111.

6 Replace the cable, and check the Link Status LED again.

7 Contact 3Com Technical Support; refer to Appendix C.

8 ACCESSING MANAGEMENT FEATURES

This chapter provides information about the following topics:

- IP Configuration
- Menu Considerations
- TELNET
- Logging On
- Logging Off
- Resilient Links

IP Configuration

To configure the IP address:

1. Log into the web interface of the Switch.
2. Click on the ATM Module button of the web mimic (see Figure 25).

Figure 25 Web Mimic Incorporating ATM Expansion Module



3. Fill in the fields of the IP address setup screen (see Figure 26) generated as a result of step 1 and click *Apply.*

Once performed upon installation, IP configuration need not be repeated thereafter.

Figure 26 IP Address Setup Form



Figure 27 IP Address Setup Error Message

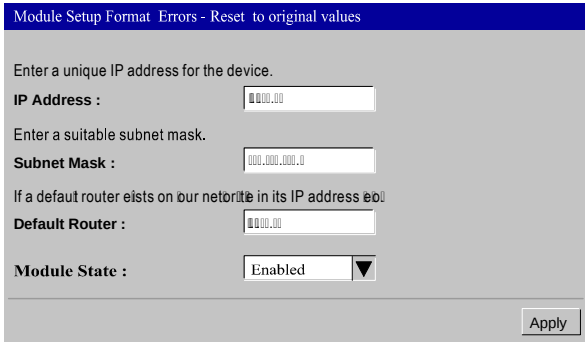

4 Make sure the values used in step 3 are correct. Incorrect value(s) generate IP address error message(s) (see Figure 27). Fill in the correct value(s) and click "Apply".

5 To change any of the parameters, repeat steps 3 and 4. (After the first log-in, you don't need the web mimic, even though it reappears following step 4.)

Menu Considerations

The menu-driven user interface built into the device is known as the *TELNET interface*. This interface has a forms-based structure with pre-defined security levels, enabling access to be restricted to particular users.

Accessing and navigating the local screens is described in the manual that accompanies your SuperStack® II Switch.

Screen Map

Figure 28 in Chapter 9, provides a map of available local management screens.

Correcting Text Entry

Use Backspace on a PC. This moves the cursor one space to the left and deletes a character.

TELNET

A TELNET connection is a Transmission Control Protocol (TCP) connection used to transmit data with interspersed TELNET control information. TELNET protocol design is based on three main principles.

- The concept of a "Network Virtual Terminal" (NVT).
- The principle of negotiated options.
- A symmetrical view of terminals and processes.

When a TELNET connection is first established, each end is assumed to originate and terminate at an NVT. This is an imaginary device representing a standard, network-wide terminal. Such a development eliminates the need for server and user hosts to maintain a database on the characteristics of each other's terminals and terminal-handling conventions.

Negotiated options constitute a design feature based on the fact that many hosts will wish to provide additional services over and above those available within an NVT. Independent of, but structured within, the TELNET protocol are various options of the form "DO, DON'T, WILL, WON'T". The first two are service proposals initiated by one of the parties or proposal acknowledgment by the other. The propositioned party is entirely free to respond with either of the second two.

The symmetry of the negotiation syntax can potentially lead to nonterminating acknowledgment loops. Each party may see the incoming commands not as acknowledgments but as new requests

which must be acknowledged. To prevent such loops, the following rules prevail:

1. Parties may only request a change in option status (i.e. a party may not send out a request merely to announce what mode it is in.
2. If a party receives what appears to be a request to enter some mode it is already in, the request will not be acknowledged to prevent endless loops in the negotiation.
3. Whenever an option proposal is sent either as a request or acknowledgment, and this will affect data processing by the initiating party, the command must be inserted in the data stream at the point where it is desired to take effect.

Practical Considerations

For management access, the 3300/1100 ATM Expansion Module uses TELNET.

Connection can be established only after the 3300/1100 ATM Expansion Module has an IP address and connectivity to the server.

While one TELNET session is in progress, no other can be started. An attempt to do so will produce the error message:

```
maximum Telnet session exceeded
```

Only when the current user disconnects from the TELNET session can another connection take place.

Logging On

1. To begin a TELNET session, open it to the ATM Expansion Module IP address. You will be prompted by the following:

```
SuperStack II 3300/1100 ATM Expansion Module
Software Version 1.0

Access Level: (read, write, admin)
```

2. Type in your access level followed by your password. Note that they are both case-sensitive:

- If you are logging on for the first time (after installation or initialization), use a default user name and password to match your access requirements and privileges, in accordance with Table 7.
- If you have been assigned a user name, access level and password, type in these details.

Table 7 Users and their Privileges

User Type	Access Level/ Default Password	Privilege
junior operator	read	Reading everything except technican displays; no writing
senior operator	write	As above, plus writing for Fast Setup and Velan settings
administrator /security official	admin	Reading and writing everything except technician-exclusive displays.
technician	admin_debug	Reading and writing everything.

For access rights to Switch screens, see the user guide that accompanies your Switch.

When you have logged on, the Main Menu screen is displayed.

Logging Off

When you have finished using the facility, select the LOGOFF option from the bottom of the Main Menu. If you accessed the facility using a TELNET session or modem, the connection will be closed automatically.

To disconnect a session, the disconnect command may be used. Alternately, it is enough simply to drop ATM connectivity in order to free resources. In addition, it is better to use the disconnect command rather than the quit option, so that another user may immediately operate the TELNET LMA. The connection will then be dropped by the foreign host.

Resilient Links

The resilient link feature, a redundancy duplication to counter link and network malfunction, enables you to protect critical links and prevent network downtime should those links fail. Resilience is provided by a *resilient link pair* consisting of a main link and a standby link. If the main link fails, the standby link immediately and automatically takes over.You

can set up resilient links quickly, with full control over their configuration, and the port at the other end of the resilient link does not have to support any resilience of its own.

Setup Conditions

The resilient link pair is defined by specifying a main port and a standby port at one end of the link. During normal operation, the main port is enabled and the standby port is disabled. If the main link fails, the main port is disabled and the standby port is enabled. If the main link becomes operational, you can then re-enable the main port and disable the standby port again. Setup of a resilient link pair requires the following conditions:

- If you wish to setup an ATM port as part of a resilient link, the other port in the resilient link must be a *Virtual LAN Trunk* (a member of all VLANs).
- Resilient link pairs cannot be set up if the stack uses the Spanning Tree Protocol (STP).
- Resilient link pairs can only be set up using fiber or twisted pair ports. The main and standby ports in the same pair, however, can use any combination of these forms.
- A resilient link pair must be defined at the same end of the link.

Typically the ATM Expansion Module port is paired with a Fast Ethernet port on the ATM Switch.

- The ports belong to the same VLANs and use the same VLAN tagging system (802.1Q tagging or VLT tagging).
- Neither of the ports are secure ports (have security enabled).
- Neither of the ports are part of a trunk port
- Neither of the ports belong to another resilient link pair.
- Ports that are part of a resilient link pair cannot be disabled unless a link failure occurs.

Every 2 minutes the Switch checks the resilient links to ensure that the fastest link is the Main (active) link in the resilient link pair. If the fastest link is not the Main (active) link, the Switch automatically makes it the Main (active) link, on the condition that:

- There have not been any *Lost Links* within the last 2 minutes on the faster link that will become the Main (active) link.

- The faster link has been up for 2 minutes.

Setting Up Resilient Links

The Resilient Links page displays existing Resilient Link pairs and allows you to create new Resilient Link pairs and delete existing Resilient Link pairs.

Display

The Resilient Links page displays the resilient link pairs that are set up for the stack:

- **Main Link** Unit 1 Port 1 / Unit 1 Port 2 / ...
  Displays the port in the stack that is the main port of the resilient link pair, and the state of the link on that port.
- **Standby Link** Unit 1 Port 1 / Unit 1 Port 2 / ...
  Displays the port in the stack that is the standby port of the resilient link pair, and the state of the link on that port.
- **Pair State** Operational / Not Operational
  Displays whether the resilient link pair is operational or not. When the pair is operational, either the main port or the standby port can forward traffic.

Creation

The Resilient Links page allows you to create a resilient link pair. To do this:

1. Click the *Add...* button. The first Add Resilient Links page is displayed.
2. Select the Switch units that are to contain the main port and standby port of the resilient link pair.
3. Click the *Next...* button.
4. From the *Main Link* field, select the main port of the resilient link pair.
5. Click the *Next...* button.
6. From the *Standby Link* field, select the standby port of the resilient link pair.
7. Click the *Next...* button. The Resilient Links page is displayed showing the new resilient link pair.

Deletion

The Resilient Links page allows you to delete a resilient link pair. To do this:

1. Click the resilient link pair.
2. Click the *Delete* button.

Swapping the Active Port of a Resilient Link Pair

The Resilient Links page allows you to swap the active (or enabled) port of a resilient link pair. To do this:

1. Click the resilient link pair.
2. Click the *Swap* button.

Failure Reporting

The 3300/1100 ATM Module will report a failure and activate redundancy in the event of:

- Major hardware or software malfunction.
- ATM physical port in down status.
- Failed ILMI configuration.
- All LECs in fail status.

9 MANAGING THE ATM EXPANSION MODULE

This chapter describes how to manage the ATM Expansion Module. If you wish to view statistics, refer to Chapter 10, "Monitoring the ATM Expansion Module".

Submenus

Figure 28 shows the menu tree structure for the ATM Expansion Module options.

Figure 28 Management Submenu Map

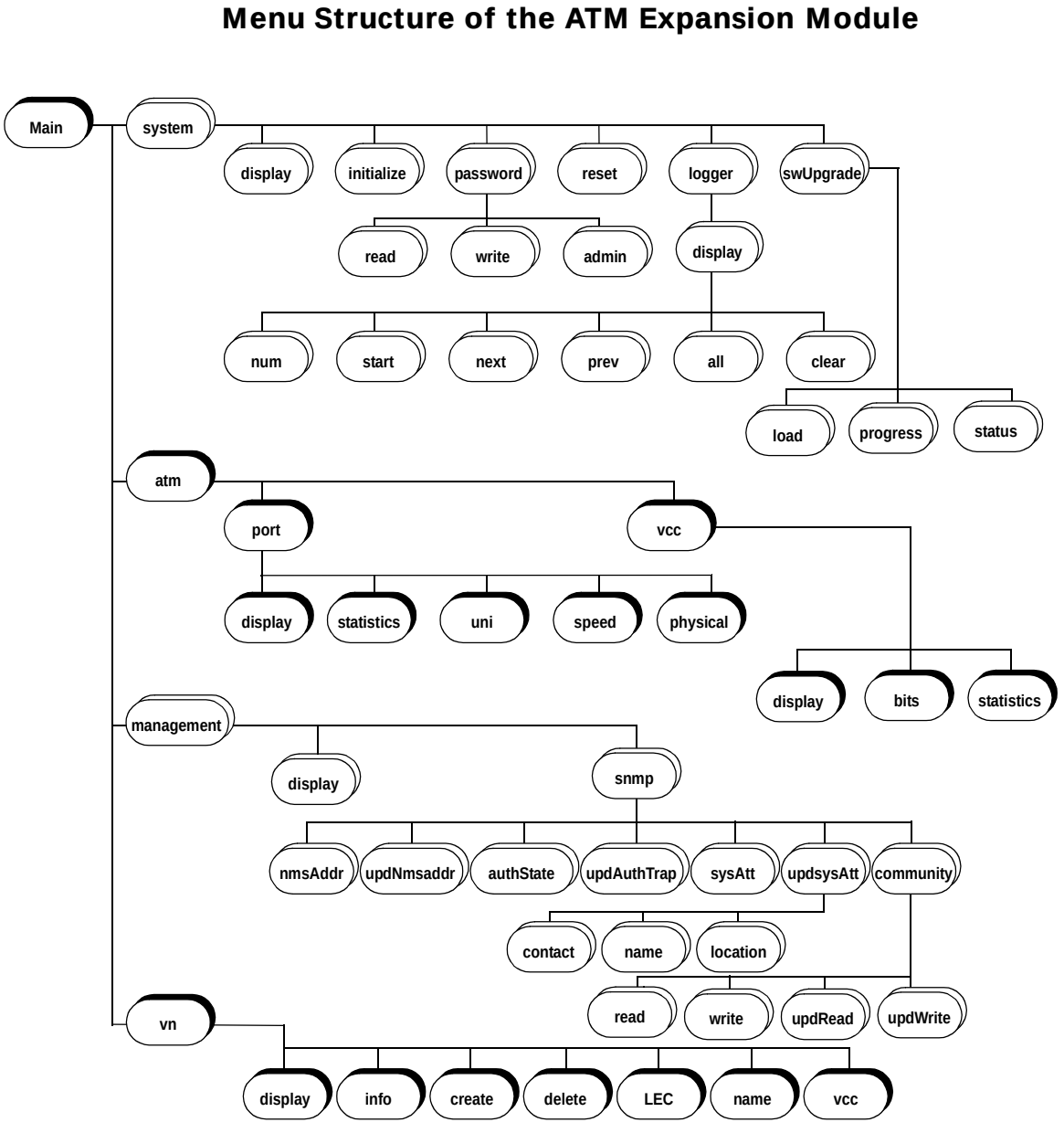

Main Menu Options

The Main menu, see Figure 29, provides the following options:

Figure 29 Main menu

```
Main Menu

[1] system      - Administer System level functions ->
[2] atm         - Administer ATM resources ->
[3] management  - Administer IP and SNMP ->
[4] vn          - Administer virtual networks ->
[5] quit        - Logout of the administration console
```

Configuring System Parameters [1]

The System menu, see Figure 30, allows you to administer system level functions.

System Menu

Figure 30 System Menu

```
System Menu

[1] display     - Display system attributes
[2] initialize  - Reset flash memory to default values
[3] password    - Update the console passwords ->
[4] reset       - Reset and reboot the device
[5] logger      - System logger ->
[6] swUpgrade   - Download system software ->
```

Display Submenu [1,1]

This option provides the general software version parameters. See Figure 31.

Figure 31 Display Menu

```
Time since reset       : 000 Days 00 Hrs 17 Mins 25 Secs
Operational version    : Alpha_02L9
Creation date          : Jul 28 1999 16:47:05
Hardware version       : 503A0130-1C  6
Monitor version        : 1.0
FPGA version           : 1.0
MAC address            : 00:C0:DA:89:E8:F0
Serial number          : BE90460003
Power up diag results  : Passed
```

Initialize Submenu [1,2] This option initializes the parameters to their factory default settings.

Passwords Submenu [1,3] This option, see Figure 32, allows you to change the login password at the access level for the ATM Expansion Module.

Figure 32 Passwords Submenu

```
Passwords menu

[1] read        - Update the read access password
[2] write       - Update the write access password
[3] admin       - Update the admin access password
```

Reset Submenu[1,4] This option resets the ATM Expansion Module.

Logger Submenu [1,5] The Logger submenu is shown in Figure 33.

Figure 33 Logger Submenu

```
System Logger Menu

[1] display     - Display log messages ->
```

Display Submenu[1,5,1]

Figure 34 shows the Display Log Messages submenu.

Figure 34 Logger Display Submenu

```
Display Log Messages Menu

 [1] num          - Number of messages
 [2] start        - Display log message
 [3] next         - Display next log message
 [4] prev         - Display previous log message
 [5] all          - Display all log message
 [6] clear        - Clear log messages
```

Table 8 Operational Meanings of Display Submenu Items

Display Submenu Item	Operational Meaning
[1] num	Number of the message that were stored in the flash memory. The maximum number of stored messages is 255, when exceeded, the older messages are overwritten.
[2] start	The index (record) number where the display begins.
[3] next	Displays the next message.
[4] prev	Displays the previous message.
[5] all	Displays all the logged records.
[6] clear	Clears the log messages from the flash memory.

System Software Download Submenu [1,6]

This option, see Figure 35, is used for the TFTP procedure for downloading new software versions. See Upgrading Software on page 100 for more details.

Figure 35 System Software Download Submenu

```
System SW Download Menu

[1] load        - Download system software
[2] progress    - Display download progress
[3] status      - Display last download status
```

Configuring an ATM Port [2]

This menu allows you to configure and set the ATM port parameters.

ATM Expansion Module Configuration

The ATM Expansion Module submenus show the settings and standards used by the ATM Expansion Module to communicate with other devices on the ATM network.



It is unlikely that you will need to change the value of these settings once they have been set.

The ATM Expansion Module configuration submenu can be accessed from the Main Menu by selecting the ATM[2] option. See Figure 36.

Figure 36 ATM Expansion Module Configuration Submenu

```
                atm
[1] port  - Administer the ATM port ->
[2] vcc   - Administer VCCs
```



Ensure that the ATM Expansion Module and the ATM Switch to which it is connected are set up to use the same signalling and SONET/SDH standards. The two devices should also use the same ILMI VCC, signaling VCC, and UNI version. If the devices do not use the same standards, they cannot communicate with each other.

Port Submenu [2,1]

The Port submenu enables port attributes display, statistics, and settings. See Figure 37.

Figure 37 Port Submenu

```
ATM Port Menu

[1] display      - Display port attributes
[2] statistics   - Display port statistics
[3] uni          - Change UNI version 3.0/3.1
[4] speed        - Change port speed OC-3/OC-12c
[5] physical     - Change port physical type SONET/SDH
```

Table 9 below explains the operational meaning of each of the submenu items above.

Table 9 Operational Meanings of Port Submenu Items

Port Submenu Item	Operational Meaning
[1] display	Shows the current ATM port attributes. See Figure 38.
[2] statistics	See Chapter 10.
[3] uni	Enables the user to set the system to network interface version 3.0 or 3.1
[4] speed	Allows you to specify the framing used: OC-3 or OC-12. The default speed is OC-12.
[5] physical	Enables the setting of the framing protocol as SONET or SDH. The default is SONET

Figure 38 Display Results

```
Admin State  : Up
Oper State   : Down
UNI version  : 3.0
ILMI VCC     : 0/16
Signaling VCC: 0/5
Speed        : OC-12
Physical     : SONET
```

VCC Submenu [2,2] The VCC submenu enables ATM VCC attributes display, statistics and settings. See Figure 39.

Figure 39 VCC Submenu

```
ATM VCC Menu

[1] display     - Display VCC information
[2] bits        - Display significant VPI/VCI bits
[3] statistics  - Display per VCC statistics
```

Table 10 explains the operational meanings of the submenu items.

Table 10 VCC Submenu Items and their Operational Meanings

Item	Operational Meaning
[1] display	Displays a table of source and destination LEC ATM addresses VPI/VCI associated with the addresses.
[2] bits	Shows the current significant VPI/VCI bit settings. The default is 3/9.
[3] statistics	Please refer to Chapter 10 for more details.

Administering IP and SNMP Management [3]

This menu option, see Figure 40, allows you to configure the ATM Expansion Module to work with the SNMP Network Management Station (NMS).

Figure 40 Management Submenu

```
Management Menu

 [1] display     - Display IP configuration
 [2] snmp        - Administer SNMP ->
```

DIsplay Submenu [3,1]

Results of the display option are shown in Figure 41. The IP address configuration that is needed for SNMP management and TELNET application is displayed.

Figure 41 Display Results

```
IP Address:      151.104.8.3
Subnet Mask:     255.255.255.0
Default Gateway: 0.0.0.0
```

SNMP Configuration Submenu [3,2]

Figure 42 displays the SNMP submenu.

Figure 42 SNMP Submenu:

```
 SNMP Menu

[1] nmsAddr       - Display NMS IP address
[2] updNmsAddr    - Update NMS IP address
[3] authState     - Display authentication trap generation
                    state
[4] updAuthTrap   - Update authentication trap generation
[5] sysAtt        - Display system attributes
[6] updSysAtt     - Administer system attributes ->
[7] community     - Administer community strings ->
```

Table 11 describes the operational meanings of the SNMP Configuration options.

Table 11 Configure Submenu Items and their Operational Meanings

Item	Operational Meaning	Entry/Display	Entry/Display/Change Meaning
[1] nmsAddr	Display NMS IP address		Displays the NMS IP address
[2]upNMSaddr	Update NMS IP address	Allows you to configure the NMS IP address	
[3]authState	Display authentication trap generation state		Displays the current state.
[4] upAuthTrap	Update authentication trap generation	Allows you to change the authentication trap state.	
[5]sysAtt	Display system attributes		Displays system administrator's details.
[6]updSysAtt	Administer system attributes	Allows you to change the system contact, system name, and system location. See Figure 43.	

Table 11 Configure Submenu Items and their Operational Meanings (continued)

Item	Operational Meaning	Entry/Display	Entry/Display/Change Meaning
[7]community	Administer community strings	Allows you to change the community string settings. See Figure 44.	Displays the community string settings for read and write access.

Figure 43 updSysAtt Submenu

```
Attribute Menu

[1] contact     - Update System Contact
[2] name        - Update System Name
[3] location    - Update System Location
```

Figure 44 Community Submenu

```
Community Menu

[1] read        - Display read community string
[2] write       - Display write community string
[3] updRead     - Update read community string
[4] udpWrite    - Update write community string
```

Extending VLANs into the ATM Network [4]

This section describes how to extend VLANs into the ATM network. The ATM port can be in one or more VLANs. Each VLAN is associated with a LEC on the ATM Expansion Module, and each LEC is mapped to an ATM ELAN.

VN Configuration Menu

The VN Configuration submenu can be accessed from the Main Menu. Select the VN option from the Main Menu. This generates the Virtual Net Configuration submenu appearing in Figure 45.

Figure 45 Virtual net Submenu:

```
Virtual Net Menu

 [1] display   - Display active virtual nets
 [2] info      - Display virtual net information
 [3] create    - Create virtual net
 [4] delete    - Delete virtual net
 [5] lec       - Enable / Disable / Restart LEC
 [6] name      - Change ELAN name
 [7] vcc       - Display LEC VCC's
```

Table 12 explains the operational meanings of the submenu items.

Table 12 Configure Submenu Items and their Operational Meanings

Item	Operational Meaning	Entry/Display	Entry/Display/Change Meaning
[1] display	Displays the LEC status for each VN.		
[2] info	Displays VLAN/ELAN information	VLAN/ELAN ID	user can set internal VLAN/ELAN identifier (1-16)
		Configured ELAN name	user can set Emulated LAN name used to retrieve LES/BUS information from the LECS
		802.1Q tag	user can set 1100/3300 VLAN tag
		Actual ELAN name	ELAN name used by the LES, possibly different from the ELAN name (see above) due to aliases used in the system
		LEC ATM address	20-Byte ATM address of the LEC
		LES/BUS/LECS address	20-Byte ATM address of the LES, BUS, and LECS to which this LEC is connected
[3] create	Adds new ELAN/VLAN.	VN Number	
		802.1Q tag	1100/3300 VLAN tag
		ELAN name	Emulated LAN name used to retrieve LES/BUS information from the LECS.
[4] delete	Deletes an ELAN/VLAN.	VN Number	
[5] lec	Allows you to control LEC status.	You can enable, disable or restart a VN LEC.	
[6] name	Allows you to change an ELAN name for a selected VN.		

Table 12 Configure Submenu Items and their Operational Meanings (continued)

Item	Operational Meaning	Entry/Display	Entry/Display/Change Meaning
[7] vcc	Displays the LEC VCC's for a selected VN.		

Setting up an ATM VLAN/ELAN

1. Go to the VN [4] submenu.
2. Select [3] Create.
3. Enter the ELAN name as configured in the LECS, and the 802.1Q tag as configured in the 1100/3300 VLAN settings and the VN number.
4. Observe creation and enabling of a new VLAN/ELAN using the Display [1] option in the VN menu.

Upgrading Software

This section describes how to upgrade the ATM Expansion Module software.

Preliminaries

Upgrading the ATM Expansion Module software takes place in three stages via a TFTP server:

- Preparing local management.
- Actual downloading.
- Resetting the device.

Before starting the TFTP upgrade procedure, make sure that the software file resides on the TFTP local disk.

Downloading

1. Set the TFTP server to server mode.
2. Change the TFTP server directory to the directory where the software version 1.00 file is located.
3. Open a TELNET session to the ATM Expansion Module Control port.
4. From the correct ATM Expansion Module menu, select `System/swUpgrade/load [1,6,1]` to perform the TFTP download.

The following message appears:

```
Server IP address:
File to be downloaded:
```

5 Type the correct TFTP Server IP address and press <**Enter**>.

6 Type in the file to be loaded and press <**Enter**>.

7 You can use the System Progress [1,6,2] menu item to check the progress of the download. Progress is reported in percentage of the file size until completion.

8 After the software upgrade procedure is completed, the switch automatically resets itself (after about two minutes) in order to validate the new software version.

10 MONITORING THE ATM EXPANSION MODULE

This chapter describes how to monitor the status and performance of your ATM Expansion Module.

Figure 28 in Chapter 9 shows the screen map.

Statistics Overview

This section provides a brief overview of the additional statistics that are available when you install an ATM Expansion Module. Refer to the user guide that accompanies the Switch for information about the statistics that are provided by the Switch software.

ATM Expansion Module statistics screens are updated every 2 seconds to show the latest information.

The ATM Expansion Module provides the following statistics:

- ATM Port Statistics
- VCC Statistics

ATM Port Statistics

The ATM Port Statistics screen provides a top level summary of traffic levels on the ATM port. You can use the summary to estimate the amount of traffic on your network backbone, and to check the validity of the incoming connection.

To view the ATM Port statistics:

1 Select the `[2] atm` option from the Main Menu. The ATM submenu is displayed, as shown in Figure 46.

Figure 46 ATM Submenu

```
atm
[1] port      - Administer the ATM port
[2] vcc       - Administer VCCs ->
```

Select the `[1] port` option from the ATM submenu. The atm/port submenu appears.

Select the `[2] Statistics` option to generate the Atm Port Statistics display.

An example of the ATM Port Statistics screen is shown in Figure 47.

Figure 47 ATM Port Statistics Screen

```
In Cells:           23
In Frames:          11
In Errored Frames:  0
Out Cells:          14
Out Frames:         5
Out Errored Frames: 0
```

The figures shown for each statistic on this screen include ATM management traffic and normal Ethernet traffic.

The parameters of this display are explained in Table 13 below.

Table 13 Port Statistics Display Items and their Meanings

Display Item	Meaning
In Cells	Number of incoming ATM cells received
Out Cells	Number of ATM cells transmitted
In Frames	Number of incoming Ethernet frames received by port
Out Frames	Number of Ethernet frames transmitted by port
In Errored Frames	Number of incoming Ethernet frames with error
Out Errored Frames	Number of outgoing Ethernet frames with error

VCC Statistics

The VCC Statistics screen provides an overview of traffic flow in each VCC.

To view the VCC statistics:

1. Select the [2] `atm` option in the Main Menu. The ATM submenu (see Figure 46) appears.
2. Select the [2] `vcc` option in the ATM submenu and observe the ATM/VCC submenu (see Table 10 in Chapter 9) appear.
3. Select the [3] `Statistics` option and observe the VCC Statistics display (see Figure 48) appear.
4. Enter the VPI /VCI of the VCC traffic you want to monitor.

Figure 48 VCC Statistics Display Example

```
In Cells      : 0
Bad CRC Frames: 0
Out Cells     : 0
```

The parameters of this display are explained in Table 14 below.

Table 14 Statistics Display Items and their Meanings

Display Item	Meaning
In Cells	Number of incoming ATM cells received by VCC
Bad CRC Frames	Number of incoming ATM frames with CRC error
Out Cells	Number of ATM cells transmitted by VCC

A

SAFETY INFORMATION

You must read the following safety information before carrying out any installation or removal of components, or any maintenance procedures.

Important Safety Information



***WARNING**: Warnings contain directions that you must follow for your personal safety. Follow all instructions carefully.*

Please read the following safety information thoroughly in conjunction with the safety information supplied with the Switch before installing the ATM Module.

- Installation and removal of the unit must be carried out by qualified personnel only.
- This unit operates under SELV (Safety Extra Low Voltage) conditions, according to IEC 950, the conditions of which are maintained only if the equipment to which it is installed is also operational under SELV.
- Optical Safety. Under normal viewing conditions there is no hazard from the Transmit LED. It is recommended however that the LED is not viewed through any magnifying device while it is powered on. It is advisable that the fiber TX port and fiber cable ends are never viewed directly when powered on.



***WARNING**: Do not remove the downlink module or transceiver module blanking plate with the power still connected.*



***WARNING**: The single mode fiber add-on is a Class 1 laser product and as such constitutes an eyesight hazard. Do not look directly at the laser either with a naked eye or through a magnifying device.*

L’information de Sécurité Importante



AVERTISSEMENT*: Les avertissements contiennent les directions que vous devez suivre pour votre sécurité personnelle. Suivez toutes les directives avec soin.*

Veuillez lire à fond l'information de la sécurité suivante avant d'installer le ATM Module.

- L'installation et l'enlèvement de l'unité doivent être faits seulement par une personnel qualifié.
- Cette unité marche sous les conditions SELV (Safety Extra Low Voltage) conformément à IEC950, ces conditions sont maintenues seulement si le matériel auquel elle est branchée, est aussi en exploitation sous SELV.
- La sécurité optique. Il n’y a pas de risques du Transmit LED, vu sous conditions normales. Cependant il est recommandé de ne pas regarder le matériel avec l’aide d’une verre grossiant quand il est allumé. Il est aussi conseillé que la port marqué Fibre TX et les cables fibre ne soient jamais regardés quand l’unité est allumé.



AVERTISSEMENT*: Ne pas enlever le Module Downlink ou la plaque d'occultation de module d'émetteur-récepteur avec le courant encore branché.*

Wichtige Sicherheitsinformationen



***WARNUNG**: Warnungen enthalten Anweisungen, die zur eigenen Sicherheit unbedingt zu beachten sind. Bitte befolgen Sie alle Anweisungen sorgfältig und genau.*

Bitte unbedingt vor dem Einbauen des ATM Module Einheit die folgenden Sicherheitsanweisungen durchlesen.

- Ein- und Ausbau des Gerätes ist nur von Fachpersonal vorzunehmen.
- Das Gerät wird mit Sicherheits-Kleinspannung nach IEC 950 (SELV = Safety Extra Low Voltage) betrieben. Angeschloßen werden können nur Geräte, die ebenfalls nach SELV betrieben werden.
- Optische Sicherheitsmassnahmen. Unter normalen Umstaenden besteht keine Gefahr durch die sendende Lumineszenzdiode (LED). Es wird jedoch empfohlen diese LED, wenn sie im Betrieb ist, niemals mittels irgenwelcher Art von Vergroesserungsgeraeten zu betrachten. Es ist ratsam mit dieser Glasfaser Sendeleitung und den Lictwellenleiter Enden keinen direkten Augenkontakt zu haben wenn sie im Betrieb sind.



***WARNUNG**: Die Austastplatten der Downlink Module- oder Sendeempfänger-Module nicht entfernen, solange die Einheit ans Stromnetz angeschlossen ist.*

B

ATM EXPANSION MODULE TECHNICAL SPECIFICATIONS

This appendix describes the following topics:

- Environmental, Safety, and EMC Specifications
- ATM Cable Specification

Environmental, Safety, and EMC Specifications

The environmental, safety, and EMC specifications for the ATM Expansion Module are shown in Table 15 and Table 16.

Table 15 Environmental Specifications

Operating Temperature	0–50° C (32–122°F)
Operating Humidity	10–95% relative humidity, non-condensing
Standards	EN60068 (IEC68)

Table 16 Safety and EMC Standards Compliance

Safety		UL 1950 EN60950 CSA 22.2 No. 950
Electromagnetic Compatibility	Emission	EN50081 - (EN55022, Class B) FCC Part 15 Class A VCCI - Class B EN61000-3-2, 3
	Immunity	EN50082 - (EN61000-4-2, 3, 4, 5, 8, 11)

ATM Cable Specification

The specifications in this section relate to the applicable standards for two cable technologies - optical and SDH and design performances of two types of fiber cable, multi-mode and single-mode.

Optical Standard Supported:

ATM Forum

- OC-12c: AF-PHY-0046-000
- OC-3c: UNI 3.1 (AF-UNI-0010.002)

ITU--T

- OC-12c/3c: ITU-T G.957 and G.958

SDH Standard Supported

ITU-T

- OC-12c/3c: I.432 , G.707-9

3Com supports 62.5/125mm Multi-Mode Fiber (MMF-PMD). The maximum inter-station distance (including device-to-network connectors) should not exceed 2 kilometers (1.25 miles).

Table 17 shows the cable specifications for standard multi-mode cabling:

Table 17 Standard Multi-mode Cable Specifications

SONET Type	Alternative Cable Specifications			Distance	Modal BW	Wavelength Range	Cable (Optical Fiber) Specification
	Core (μm)	Cladding (μm)	Numerical Aperture				
OC-12c MMF	62.5	125	0.275	500m	500Mhz -Km at 1300nm	1270-1380nm	IEC 793-2 Type A1b and TIA/EIA-492AAAA-A
(LED Based)	50	125	0.2				IEC 793-2 Type A1a
OC-3c MMF	62.5	125	0.275	500m	500Mhz -Km at 1300nm	1270-1380nm	IEC 793-2 Type A1b and TIA/EIA-492AAAA-A
(OC-12c Transceiver Based)	50	125	0.2				IEC 793-2 Type A1a

Table 17 Standard Multi-mode Cable Specifications (continued)

SONET Type	Attenuation (db)	Mean Launched Power (dBm)	Minimum Receiver Sensitivity (dBm)
OC-12c MMF	6.0	-20 to -14	-26
(LED Based)	2.0	-24 to -14	-26
OC-3c MMF	6.0	-20 to -14	-26
(OC12c Transceiver Based)	2.0	-24 to -14	-26

Table 18 shows the cable specifications for standard single-mode cable specifications (OC-12c/OC-3c Short Reach).

Table 18 Standard Single-Mode Cable Specifications (OC12c/OC3c Short Reach)

Specification	Description
Core	9 µm diameter
Cladding	125 µm diameter nominal
Maximum distance between nodes	2 km. (1.25 mi.)
Wavelength range	1261-1360
Optical fiber specification	IEC 793-2 and ANSI/TIA/EIA-492CAAA
Attenuation range	0 to 12 dB
Mean launched power	-15 to -8 dBm
Minimum receiver sensitivity	-28dBm

C

TECHNICAL SUPPORT

3Com provides easy access to technical support information through a variety of services. This appendix describes these services.

Information contained in this appendix is correct at time of publication. For the most recent information, 3Com recommends that you access the 3Com Corporation World Wide Web site.

On-line Technical Services

3Com offers worldwide product support 24 hours a day, 7 days a week, through the following online systems:

- World Wide Web site
- 3Com Knowledgebase Web Services
- 3Com FTP site
- 3Com Bulletin Board Service (3Com BBS)
- 3Com Facts℠ Automated Fax Service

World Wide Web Site

To access the latest networking information on the 3Com Corporation World Wide Web site, enter this URL into your Internet browser:

http://www.3com.com/

This service provides access to online support information such as technical documentation and software, as well as support options that range from technical education to maintenance and professional services.

3Com Knowledgebase Web Services

This interactive tool contains technical product information compiled by 3Com expert technical engineers around the globe. Located on the World Wide Web at **http://knowledgebase.3com.com**, this service gives all 3Com customers and partners complementary, round-the-clock access to technical information on most 3Com products.

3Com FTP Site

Download drivers, patches, software, and MIBs across the Internet from the 3Com public FTP site. This service is available 24 hours a day, 7 days a week.

To connect to the 3Com FTP site, enter the following information into your FTP client:

- Hostname: **ftp.3com.com**
- Username: **anonymous**
- Password: <**your Internet e-mail address**>



You do not need a user name and password with Web browser software such as Netscape Navigator and Internet Explorer.

3Com Bulletin Board Service

The 3Com BBS contains patches, software, and drivers for 3Com products. This service is available through analog modem or digital modem (ISDN) 24 hours a day, 7 days a week.

Access by Analog Modem

To reach the service by modem, set your modem to 8 data bits, no parity, and 1 stop bit. Call the telephone number nearest you:

Country	Data Rate	Telephone Number
Australia	Up to 14,400 bps	61 2 9955 2073
Brazil	Up to 28,800 bps	55 11 5181 9666
France	Up to 14,400 bps	33 1 6986 6954
Germany	Up to 28,800 bps	4989 62732 188
Hong Kong	Up to 14,400 bps	852 2537 5601
Italy	Up to 14,400 bps	39 2 27300680
Japan	Up to 14,400 bps	81 3 5977 7977
Mexico	Up to 28,800 bps	52 5 520 7835
P.R. of China	Up to 14,400 bps	86 10 684 92351
Taiwan, R.O.C.	Up to 14,400 bps	886 2 377 5840
U.K.	Up to 28,800 bps	44 1442 438278
U.S.A.	Up to 53,333 bps	1 847 262 6000

Access by Digital Modem

ISDN users can dial in to the 3Com BBS using a digital modem for fast access up to 64 Kbps. To access the 3Com BBS using ISDN, call the following number:

1 847 262 6000

3Com Facts Automated Fax Service

The 3Com Facts automated fax service provides technical articles, diagrams, and troubleshooting instructions on 3Com products 24 hours a day, 7 days a week.

Call 3Com Facts using your Touch-Tone telephone:

1 408 727 7021

Support from Your Network Supplier

If you require additional assistance, contact your network supplier. Many suppliers are authorized 3Com service partners who are qualified to provide a variety of services, including network planning, installation, hardware maintenance, application training, and support services.

When you contact your network supplier for assistance, have the following information ready:

- Product model name, part number, and serial number
- A list of system hardware and software, including revision levels
- Diagnostic error messages
- Details about recent configuration changes, if applicable

If you are unable to contact your network supplier, see the following section on how to contact 3Com.

Support from 3Com

If you are unable to obtain assistance from the 3Com online technical resources or from your network supplier, 3Com offers technical telephone support services. To find out more about your support options, call the 3Com technical telephone support phone number at the location nearest you.

When you contact 3Com for assistance, have the following information ready:

- Product model name, part number, and serial number
- A list of system hardware and software, including revision levels
- Diagnostic error messages
- Details about recent configuration changes, if applicable

Here is a list of worldwide technical telephone support numbers:

Country	Telephone Number	Country	Telephone Number
Asia, Pacific Rim			
Australia	1 800 678 515	P.R. of China	10800 61 00137 or
Hong Kong	800 933 486		021 6350 1590
India	+61 2 9937 5085	Singapore	800 6161 463
Indonesia	001 800 61 009	S. Korea	
Japan	0031 61 6439	From anywhere in S. Korea:	00798 611 2230
Malaysia	1800 801 777	From Seoul:	(0)2 3455 6455
New Zealand	0800 446 398	Taiwan, R.O.C.	0080 611 261
Pakistan	+61 2 9937 5085	Thailand	001 800 611 2000
Philippines	1235 61 266 2602		
Europe			
From anywhere in Europe, call:	+31 (0)30 6029900 phone +31 (0)30 6029999 fax		
Europe, South Africa, and Middle East From the following countries, you may use the toll-free numbers:			
Austria	0800 297468	Netherlands	0800 0227788
Belgium	0800 71429	Norway	800 11376
Denmark	800 17309	Poland	00800 3111206
Finland	0800 113153	Portugal	0800 831416
France	0800 917959	South Africa	0800 995014
Germany	0800 1821502	Spain	900 983125
Hungary	00800 12813	Sweden	020 795482
Ireland	1800 553117	Switzerland	0800 55 3072
Israel	1800 9453794	U.K.	0800 966197
Italy	1678 79489		
Latin America			
Argentina	AT&T +800 666 5065	Mexico	01 800 CARE (01 800 2273)
Brazil	0800 13 3266	Peru	AT&T +800 666 5065
Chile	1230 020 0645	Puerto Rico	800 666 5065
Colombia	98012 2127	Venezuela	AT&T +800 666 5065
North America	1 800 NET 3Com (1 800 638 3266) Enterprise Customers: 1 800 876-3266		

INDEX

Numbers

3Com Bulletin Board Service (3Com BBS) 116
3Com Knowledgebase Web Services 115
3Com URL 115
3ComFacts 117
802.1Q tagging 47, 99

A

access
  by analog modem 116
access level 84
active link 86
address registration
  LAN Emulation 24
address resolution 23, 29, 41
  LAN Emulation 25
administering
  community strings 98
  IP and SNMP management 96
  system attributes 97
Asynchronous Transfer Mode, see ATM
ATM
  address resolution 29, 41
  ATM Layer 42
  basics 35
  benefits 13
  cell structure 42
  configuration examples 63
    building backbone 63
    campus 64
    resilient links 66
  configuration rules 60
  control connections 61
  enabling VCC attributes 95
  layer 42
  LEC in edge device 18
  management traffic 104
  network limitations 61
  number of connections per ELAN 61
  OC-3 fiber link 66
  planning your network 59
  port configuration 94
  port statistics 103
  resilient links 66
  terminology 10
ATM Adaptation Layer (AAL)
  Segmentation and Reassembly (SAR) 34
ATM address
  format 41
  of LES in LECS 19
  registered in LES 18
ATM benefits 13
ATM cell
  benefits of use 36
  cell header 42
  Cell Loss Priority (CLP) 43
  Generic Flow Control (GFC) 43
  Header Error Check (HEC) 43
  Payload Type Identifier (PTI) 43
  structure 42
  VCI field 43
  VPI field 43
ATM layer 42
  general 35
ATM Module
  configuration 94
  configuration submenu 94
  connecting a cable 75
  device support 72
  features 14
  features summary 14
  hardware version number 95
  installing 74
  LEDs 77
  operating humidity 111
  operating temperature 111
  post-installation checks 77
  power supply 78
  standards 111
ATM network
  connecting bridged-LAN environments over 17
  connecting legacy end stations over 17
authentication trap generation
  updating 97

B

bandwidth
  calculation 112
bridged-LAN environments
  connecting 17
broadcast packets 55
Bulletin Board Service 116
BUS 55

C

cable connecting 75
cable specification 111
  optical standard supported 112
  SDH standard supported 112
cables
  connecting to the ATM Module 75
Cell Loss Priority (CLP) 43
cell structure 42
changing
  community strings 98
  ELAN name 99
community strings
  administering 98
  changing 98
compatibility
  electromagnetic 70
configuration rules for ATM 60
configuring
  ATM Port 94
connections
  connecting cables 75
  control 61
  data 30, 61
  management 26
  multiplexing and de-multiplexing 43
  network technology 35
  required per ELAN 61
  troubleshooting 78
control connections 61
control VCC 20
conventions
  notice icons 11
  text 11
CoreBuilder 7000
  LANE services 27
  network examples 64
creating
  new ELAN/VLAN 99
  resilient links 87
CSA statement 70

D

data frame 18
data transfer 23
data VCC 21
default VLAN 47
deleting
  ELAN/VLAN. 99
  resilient links 88
de-multiplexing 43
device support 72
discarding cells
  Cell Loss Priority (CLP) 43
displaying
  authentication trap generation state 97
  LEC VCC's for a selected VN 100
  NMS IP address 97
  system attributes 97

E

ELAN
  components 17
  connections 20
electromagnetic compatibility 70
Emulated LAN (ELAN)
  ATM Module 61
  mapping to VLANs 55, 61
  resource planning 61
  services 61
enabling
  ATM VCC attributes 95
environmental specifications 111
error detection
  Header Error Check (HEC) 43
Ethernet traffic 104

F

failure reporting
  activating redundancy 88
fax service (3ComFacts) 117
FCC statement 70
flush protocol 22
  frame ordering 22
frame
  ordering 22
  unicast 31

G

Generic Flow Control (GFC) 43
guide
  finding information 10
GVRP *See* IEEE 802.1Q learning

H

hardware version number 95
Header Error Check (HEC) 43

I

IEEE 802.1Q 46
  learning 48
Interim Local Management Interface (ILMI) 41
  address resolution 41
IP configuration 81

L

LAN Emulation (LANE)
  address resolution 25
  benefits 14
  connection management 26
  frame ordering 22
  LE_ARP 30
  registration 24
  within 3Com devices 27
LAN Emulation Client (LEC)
  MAC address proxy 29, 30
LAN Emulation Configuration Server (LECS)
  ATM address 28
LAN Emulation Server, see LES
LAN Emulation Service 26
LAN Emulation(LANE)
  components 26
LEC
  in ATM edge device 18
  LUNI 23
LEC to ELAN
  connecting 23
LEC to LES
  connecting 23
  data transfer 23
  registration 23
LEDs
  ATM Expansion Module 77
  summary 77
legacy end stations
  connecting 17
LES
  ATM addresses registered in 18
  directory populating 18
  LUNI 23
logging off 85
lost links 86

M

MAC address
  number of addresses supported 61
  proxy 29, 30
main link
  resilient links 87
manual configuration
  planning 62
menu considerations 82
MIBs 116
multicast packets 55
multiplexing 43

N

network supplier support 117
Network Virtual Terminal (NVT) 83
NMS IP address
  updating 97

O

OC-12 link 66
OC-12c 14
OC-3c 14
on-line technical services 115

P

pair state
  resilient links 87
passwords
  changing at access level 92
  default 85
payload 42
Payload Type Identifier (PTI) 43
Permanent Virtual Circuit (PVC) 40, 62
physical connections
  checking 78
physical layer 43
  path, line and section 44
planning your network 59
port
  configuration 94
  statistics 103
Port submenu 94
Power On Self Test (POST) 76
power supply 73, 78
protocols
  flush 22
PTI 43

R

redundancy
  activating 88
registration
  LUNI 23

resilient link 66, 85
configuration example 66
creating 87
deleting 88
displaying 87
setting up 87
routing 27
rules for ATM configuration 60

S

safety and EMC standards compliance 111
safety information 67
English 107
French 108
German 109
screen map 83
Segmentation and Reassembly (SAR) 34
setting up
ATM VLAN/ELAN 100
signalling 35, 38
SNMP configuration options 97
software upgrade 72
Spanning Tree Protocol (STP) 86
specifications
cabling 111
standby link
resilient links 87
statistics
overview 103
sampling period 103
status
screen map 103
swapping active port
resilient links 88
Switched Virtual Circuit (SVC) 39, 62
when to use 62
switching
technology 35

T

technical specifications
cabling 111
environment 111
technical support
3Com Knowledgebase Web Services 115
3Com URL 115
Bulletin Board Service 116
fax service 117
network suppliers 117
technology, switching 35
TELNET 83, 84
text entry
correcting 83
TFTP procedure
for downloading software 93
TFTP server 100
troubleshooting
using LEDs 77

U

unicast frames 31
flush protocol 22
paths 22
unicast packets 55
updating
authentication trap generation 97
NMS IP address 97
URL 115
user guide
finding information 10
users
default 85
User-to-Network Interface (UNI) 40

V

VCC
statistics 105
submenu 95
VCCI statement 70
viewing
ATM port statistics 104
virtual channel 37
Virtual Channel Connection (VCC) 37
Virtual Channel Identifier (VCI) 38
field in ATM cell 43
Virtual LAN
See VLANs 45
Virtual LAN Trunk (VLT) 86
virtual path 37
Virtual Path Identifier (VPI) 38
field in ATM cell 43
VLANs
802.1Q tagging 47
benefits 45
configuration examples 50
connecting to legacy switch units 49
connecting to other VLANs 49
default 47
defining information for 47
IEEE 802.1Q 46
IEEE 802.1Q learning 48
mapping to ELAN 55, 61, 98

placing ports in multiple 47
placing ports in single 47
VLT tagging 48
VLT tagging 48

W

web mimic
ATM Expansion Module 81
World Wide Web (WWW) 115

3Com Corporation LIMITED WARRANTY

SuperStack® II Switch 1100/3300 ATM Expansion Module

HARDWARE

3Com warrants this hardware product to be free from defects in workmanship and materials, under normal use and service, for the following length of time from the date of purchase from 3Com or its authorized reseller:

SuperStack® II Switch 1100/3300 ATM Expansion Module One (1) year

3Com's sole obligation under this express warranty shall be, at 3Com's option and expense, to repair the defective product or part, deliver to Customer an equivalent product or part to replace the defective item, or if neither of the two foregoing options is reasonably available, 3Com may, in its sole discretion, refund to Customer the purchase price paid for the defective product. All products that are replaced will become the property of 3Com. Replacement products may be new or reconditioned. 3Com warrants any replaced or repaired product or part for ninety (90) days from shipment, or the remainder of the initial warranty period, whichever is longer.

SOFTWARE

3Com warrants that each software program licensed from it will perform in substantial conformance to its program specifications, for a period of ninety (90) days from the date of purchase from 3Com or its authorized reseller. 3Com warrants the media containing software against failure during the warranty period. No updates are provided. 3Com's sole obligation under this express warranty shall be, at 3Com's option and expense, to refund the purchase price paid by Customer for any defective software product, or to replace any defective media with software which substantially conforms to applicable 3Com published specifications. Customer assumes responsibility for the selection of the appropriate applications program and associated reference materials. 3Com makes no warranty or representation that its software products will meet Customer's requirements or work in combination with any hardware or applications software products provided by third parties, that the operation of the software products will be uninterrupted or error free, or that all defects in the software products will be corrected. For any third party products listed in the 3Com software product documentation or specifications as being compatible, 3Com will make reasonable efforts to provide compatibility, except where the non-compatibility is caused by a "bug" or defect in the third party's product or from use of the software product not in accordance with 3Com's published specifications or user manual.

YEAR 2000 WARRANTY

In addition to the Hardware Warranty and Software Warranty stated above, 3Com warrants that each product sold or licensed to Customer on and after January 1, 1998 that is date sensitive will continue performing properly with regard to such date data on and after January 1, 2000, provided that all other products used by Customer in connection or combination with the 3Com product, including hardware, software, and firmware, accurately exchange date data with the 3Com product, with the exception of those products identified at 3Com's Web site, http://www.3com.com/products/yr2000.html, as not meeting this standard. If it appears that any product that is stated to meet this standard does not perform properly with regard to such date data on and after January 1, 2000, and Customer notifies 3Com before the later of April 1, 2000, or ninety (90) days after purchase of the product from 3Com or its authorized reseller, 3Com shall, at its option and expense, provide a software update which would effect the proper performance of such product, repair such product, deliver to Customer an equivalent product to replace such product, or if none of the foregoing is feasible, refund to Customer the purchase price paid for such product.

Any software update or replaced or repaired product will carry a Year 2000 Warranty for ninety (90) days after purchase or until April 1, 2000, whichever is later.

OBTAINING WARRANTY SERVICE

Customer must contact a 3Com Corporate Service Center or an Authorized 3Com Service Center within the applicable warranty period to obtain warranty service authorization. Dated proof of purchase from 3Com or its authorized reseller may be required. Products returned to 3Com's Corporate Service Center must be pre-authorized by 3Com with a Return Material Authorization (RMA) number marked on the outside of the package, and sent prepaid and packaged appropriately for safe shipment, and it is recommended that they be insured or sent by a method that provides for tracking of the package. The repaired or replaced item will be shipped to Customer, at 3Com's expense, not later than thirty (30) days after 3Com receives the defective product.

Dead- or Defective-on-Arrival. In the event a product completely fails to function or exhibits a defect in materials or workmanship within the first forty-eight (48) hours of installation but no later than thirty (30) days after the date of purchase, and this is verified by 3Com, it will be considered dead- or defective-on-arrival (DOA) and a replacement shall be provided by advance replacement. The replacement product will normally be shipped not later than three (3) business days after 3Com's verification of the DOA product, but may be delayed due to export or import procedures. When an advance replacement is provided and Customer fails to return the original product to 3Com within fifteen (15) days after shipment of the replacement, 3Com will charge Customer for the replacement product, at list price.

3Com shall not be responsible for any software, firmware, information, or memory data of Customer contained in, stored on, or integrated with any products returned to 3Com for repair, whether under warranty or not.

WARRANTIES EXCLUSIVE

IF A 3COM PRODUCT DOES NOT OPERATE AS WARRANTED ABOVE, CUSTOMER'S SOLE REMEDY FOR BREACH OF THAT WARRANTY SHALL BE REPAIR, REPLACEMENT, OR REFUND OF THE PURCHASE PRICE PAID, AT 3COM'S OPTION. TO THE FULL EXTENT ALLOWED BY LAW, THE FOREGOING WARRANTIES AND REMEDIES ARE EXCLUSIVE AND ARE IN LIEU OF ALL OTHER WARRANTIES, TERMS, OR CONDITIONS, EXPRESS OR IMPLIED, EITHER IN FACT OR BY OPERATION OF LAW, STATUTORY OR OTHERWISE, INCLUDING WARRANTIES, TERMS, OR CONDITIONS OF MERCHANTABILITY, FITNESS FOR A PARTICULAR PURPOSE, SATISFACTORY QUALITY, CORRESPONDENCE WITH DESCRIPTION, AND NON-INFRINGEMENT, ALL OF WHICH ARE EXPRESSLY DISCLAIMED. 3COM NEITHER ASSUMES NOR AUTHORIZES ANY OTHER PERSON TO ASSUME FOR IT ANY OTHER LIABILITY IN CONNECTION WITH THE SALE, INSTALLATION, MAINTENANCE OR USE OF ITS PRODUCTS.

3COM SHALL NOT BE LIABLE UNDER THIS WARRANTY IF ITS TESTING AND EXAMINATION DISCLOSE THAT THE ALLEGED DEFECT OR MALFUNCTION IN THE PRODUCT DOES NOT EXIST OR WAS CAUSED BY CUSTOMER'S OR ANY THIRD PERSON'S MISUSE, NEGLECT, IMPROPER INSTALLATION OR TESTING, UNAUTHORIZED ATTEMPTS TO OPEN, REPAIR OR MODIFY THE PRODUCT, OR ANY OTHER CAUSE BEYOND THE RANGE OF THE INTENDED USE, OR BY ACCIDENT, FIRE, LIGHTNING, OTHER HAZARDS, OR ACTS OF GOD.

LIMITATION OF LIABILITY

TO THE FULL EXTENT ALLOWED BY LAW, 3COM ALSO EXCLUDES FOR ITSELF AND ITS SUPPLIERS ANY LIABILITY, WHETHER BASED IN CONTRACT OR TORT (INCLUDING NEGLIGENCE), FOR INCIDENTAL, CONSEQUENTIAL, INDIRECT, SPECIAL, OR PUNITIVE DAMAGES OF ANY KIND, OR FOR LOSS OF REVENUE OR PROFITS, LOSS OF BUSINESS, LOSS OF INFORMATION OR DATA, OR OTHER FINANCIAL LOSS ARISING OUT OF OR IN CONNECTION WITH THE SALE, INSTALLATION, MAINTENANCE, USE, PERFORMANCE, FAILURE, OR INTERRUPTION OF ITS PRODUCTS, EVEN IF 3COM OR ITS AUTHORIZED RESELLER HAS BEEN ADVISED OF THE POSSIBILITY OF SUCH DAMAGES, AND LIMITS ITS LIABILITY TO REPAIR, REPLACEMENT, OR REFUND OF THE PURCHASE PRICE PAID, AT 3COM'S OPTION. THIS DISCLAIMER OF LIABILITY FOR DAMAGES WILL NOT BE AFFECTED IF ANY REMEDY PROVIDED HEREIN SHALL FAIL OF ITS ESSENTIAL PURPOSE.

DISCLAIMER

Some countries, states, or provinces do not allow the exclusion or limitation of implied warranties or the limitation of incidental or consequential damages for certain products supplied to consumers, or the limitation of liability for personal injury, so the above limitations and exclusions may be limited in their application to you. When the implied warranties are not allowed to be excluded in their entirety, they will be limited to the duration of the applicable written warranty. This warranty gives you specific legal rights which may vary depending on local law.

GOVERNING LAW

This Limited Warranty shall be governed by the laws of the State of California, U.S.A. excluding its conflicts of laws principles and excluding the United Nations Convention on Contracts for the International Sale of Goods.

3Com Corporation
5400 Bayfront Plaza
Santa Clara, CA 95054
(408) 326-5000