

EtherLink® Server 10/100 PCI NIC Family User Guide

3C980x-TXM 10/100 PCI server network interface card with Dynamic*Access*® technology

3C982-TXM 10/100 PCI dual port server network interface card with Dynamic*Access*® technology

http://www.3com.com/
http://www.3com.com/productreg

Published October 2000

3Com Corporation ■ 5400 Bayfront Plaza ■ Santa Clara, California ■ 95052-8145

Copyright © 2000 3Com Corporation. All rights reserved. No part of this documentation may be reproduced in any form or by any means or used to make any derivative work (such as translation, transformation, or adaptation) without written permission from 3Com Corporation.

3Com Corporation reserves the right to revise this documentation and to make changes in content from time to time without obligation on the part of 3Com Corporation to provide notification of such revision or change.

3Com Corporation provides this documentation without warranty, term, or condition of any kind, either implied or expressed, including, but not limited to, the implied warranties, terms or conditions of merchantability, satisfactory quality, and fitness for a particular purpose. 3Com may make improvements or changes in the product(s) and/or the program(s) described in this documentation at any time.

If there is any software on removable media described in this documentation, it is furnished under a license agreement included with the product as a separate document, in the hard copy documentation, or on the removable media in a directory file named LICENSE.TXT or !LICENSE.TXT. If you are unable to locate a copy, please contact 3Com and a copy will be provided to you.

UNITED STATES GOVERNMENT LEGEND

If you are a United States government agency, then this documentation and the software described herein are provided to you subject to the following:

All technical data and computer software are commercial in nature and developed solely at private expense. Software is delivered as "Commercial Computer Software" as defined in DFARS 252.227-7014 (June 1995) or as a "commercial item" as defined in FAR 2.101(a) and as such is provided with only such rights as are provided in 3Com's standard commercial license for the Software. Technical data is provided with limited rights only as provided in DFAR 252.227-7015 (Nov 1995) or FAR 52.227-14 (June 1987), whichever is applicable. You agree not to remove or deface any portion of any legend provided on any licensed program or documentation contained in, or delivered to you in conjunction with, this User Guide.

Unless otherwise indicated, 3Com registered trademarks are registered in the United States and may or may not be registered in other countries.

3Com, the 3Com logo, DynamicAccess, EtherDisk, EtherLink, and Parallel Tasking are registered trademarks of 3Com Corporation or its subsidiaries. 3Com Facts is a service mark of 3Com Corporation or its subsidiaries.

Intel and Pentium are registered trademarks of Intel Corporation. Microsoft, Windows and Windows NT are registered trademarks of Microsoft Corporation. NetWare and Novell are registered trademarks of Novell, Inc. SCO, SCO OpenServer, and UnixWare are trademarks or registered trademarks of The Santa Cruz Operation, Inc.

All other company and product names may be trademarks of the respective companies with which they are associated.

About This Guide

This guide describes how to install, configure, and troubleshoot the following 3Com® network interface card (NIC):

Description	Model Number
3Com EtherLink Server 10/100 PCI NIC	3C980-TXM 3C980B-TXM 3C980C-TXM
3Com EtherLink 10/100 PCI Dual Port Server NIC	3C982-TXM

This guide is intended for the network administrator, network operator, or network hardware installer. Knowledge of Ethernet and the server network operating system is required.

Documentation is available in Adobe Acrobat Reader Portable Document Format (PDF) or HTML on the 3Com Web site: http://www.3com.com. You can download Acrobat Reader from the Adobe Systems Incorporated web site: http://www.adobe.com/.

CONTENTS

1 INTRODUCTION

Overview 1
Advanced Server Features 2
- Bidirectional Load Balancing 2
- Self-Healing Drivers 3
- Failover 3
- VLANs 4
- Server Features Using Other NICs 5

Hot Plug NIC Installation 5
Remote Wake-Up (Single Port Models Only) 5
Managed PC Boot Agent (MBA) Software 5
Desktop Management Interface (DMI) 2.0 6
Remote System Alerts 6

2 INSTALLING AND CONNECTING THE NIC

Safety Precautions 7
Installation Requirements 7
Preparing the NIC and the Computer 8
Installing and Connecting the NIC 9
Installing Software 11
- Obtaining Installation Diskettes 12
- Creating Diskettes in Windows 12

3 INSTALLING AND CONFIGURING IN WINDOWS

Software Installation Requirements 13
Getting Help 13
Installing in Windows NT 13
Installing in Windows 2000 14
Configuring SHD Parameter Settings 14
- Windows NT 14
- Windows 2000 15

Verifying Successful Installation 16
- Windows NT 16
- Windows 2000 16

Updating Software in Windows 16
- Windows NT 16
- Windows 2000 17

DynamicAccess Server Features 17
Planning Groups and VLANs 17
Installing Dynamic*Access* Software 19
Configuring Server Features 19
Windows NT 19
Windows 2000 19
Creating a Group 20
Adding NICs to a Group 21
Specifying a Dedicated IP Address 21
Changing an IP Address 22
Creating a VLAN 22
Specifying Traffic Priorities (Windows NT 4.0 Only) 23
Saving the Configuration 23
Disabling Load Balancing for a Group 23
Changing the Primary NIC 24
Removing a NIC from a Group 24
Deleting or Editing a VLAN 24
Displaying NIC Properties 24
Displaying Group Properties 24
Specifying Failover from Gigabit to 10/100 PCI 24
Troubleshooting a Load Balancing Configuration 25
Changing Windows 2000 Property Settings 25
Identifying Windows 2000 Miniport and LAN Connections 25

4 INSTALLING AND CONFIGURING IN NETWARE

Software Installation Requirements 27
Netware Packet Receive Buffers 27
Slot Numbers for Multiple NICs 27
Obtaining Slot Numbers 27
Installation and Configuration Instructions 28
Load the 3Com EtherLink Server CD 28
Copy the Driver 28
Specify the Slot Number 29
Load the Driver 29
Set Up Another NIC 29
Install Server Features 30
Configure Groups 30
Verify the Installation and Configuration 31
Changing NetWare Driver Configuration Parameters 32
Configuring Groups 34
Planning the Configuration 34
Adding a Secondary NIC to a Group 35
Adding a Group 36
Server Feature Commands 37
group 38
display status 38
help 38

link timeout 39
probe interval 39
receive timeout 39
retry count 39
send timeout 40
ungroup 40
wait timeout 40
Troubleshooting a Group Configuration 41

5 CONFIGURING THE NIC

Configuration Settings 43
Configuration Methods 44
Configuring the NIC in Windows 44
Configuring the Managed PC Boot Agent (MBA) 45
Booting From the Network 45
Disabling the 3Com Logo 46

6 TROUBLESHOOTING THE NIC

Interpreting the LEDs 47
Viewing the NIC LEDs in the Diagnostics Program 48
Accessing the 3Com Knowledgebase 48
Accessing the 3Com NIC Help System 48
Accessing Other Information 48
Troubleshooting the Network Connection 49
Troubleshooting Remote Wake-Up 49
Removing the Network Driver 50
Windows NT 50
Windows 2000 51
NetWare 51
Removing Server Features 51
Windows NT and Windows 2000 51
NetWare 52
Removing 3Com NIC Diagnostics 52
Windows NT and Windows 2000 52

7 RUNNING NIC DIAGNOSTICS IN WINDOWS

Overview 53
Running the NIC Test 53
Running the Network Test 54
Viewing Network Statistics 54
Using the 3Com Icon in the Windows System Tray 54
Enabling the Icon 54
Displaying Network Statistics 55

A INSTALLING A 3COM NIC WHILE INSTALLING THE NOS
Windows Fresh Installation 57
Windows NT 57
Windows 2000 57
NetWare Fresh Installation 57
Requirements 57
Installation Instructions 57

B INSTALLING THE 3COM DMI AGENT
Overview 59
System Requirements 60
Installation Instructions 60

C SPECIFICATIONS

D TECHNICAL SUPPORT
Online Technical Services 63
World Wide Web Site 63
3Com FTP Site 63
Support from Your Network Supplier 63
Support from 3Com 64
Returning Products for Repair 66

INDEX

3COM CORPORATION LIMITED WARRANTY

REGULATORY INFORMATION

3COM END USER SOFTWARE LICENSE AGREEMENT

PRODUCT REGISTRATION

1 INTRODUCTION

Overview

The 3Com® EtherLink® Server 10/100 PCI NIC family of network interface cards (NIC) connect PCI-compliant server computers to Ethernet or Fast Ethernet networks.

Parallel Tasking II® hardware technology, plus a powerful suite of Dynamic*Access*® technology software features, relieve network congestion and ensure high performance and maximum bandwidth availability.

Figure 1 EtherLink Server 10/100 PCI NIC

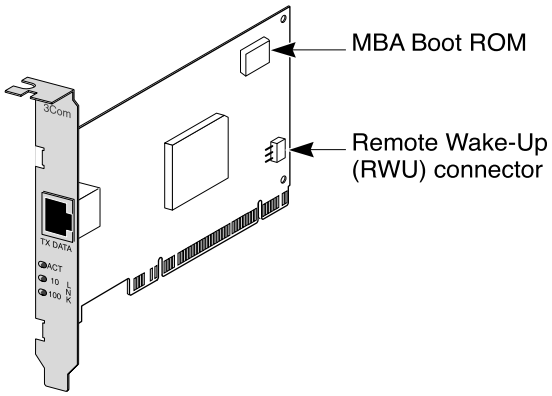

Figure 2 Dual Port EtherLink Server 10/100 PCI NIC

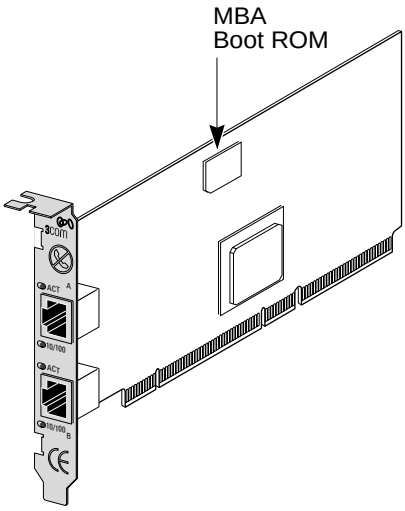

Each NIC supports these features:

- Advanced Server Features—Improve network performance, management, and control.
- Hot Plug NIC Installation—Lets you add a new NIC or remove and replace a NIC without turning off power to the computer.
- Remote Wake-Up (Single Port Models Only)—Lets you power-on a computer remotely for after-hours administration.
- Integrated boot ROM (through port A on 3C982-TXM) with Managed PC Boot Agent (MBA) Software—Adds management capabilities by enabling the computer to boot from another computer, rather than from its local drive.
- Desktop Management Interface (DMI) 2.0—Enables managed computers and net computers to report details about themselves and their peripheral devices across the network to a DMI 2.0-compliant management application.
- Remote System Alerts (heartbeat packets)—Can signal a possible computer power loss or theft.

Advanced Server Features

3Com Dynamic*Access* technology advanced network software adds intelligence to the NIC to improve network performance, management, and control. Dynamic*Access* server features relieve network congestion and ensure high performance and maximum bandwidth availability.

- Self-healing drivers (SHDs) detect common error conditions and correct them while maintaining server link performance.
- Bidirectional load balancing groups share the network load over resilient server links (RSLs) that keep traffic flowing both into a server and out of a server even if a NIC in a group is temporarily disconnected.
- VLANs (IEEE 802.1Q multiple virtual LANs) let you divide network segments into logical partitions that simplify configuration changes, organize work groups efficiently, help to control traffic, and provide extra security.
- Traffic prioritization (IEEE 802.1p/Q)—Ensures that business-critical and delay-sensitive traffic (such as multimedia applications) has priority over normal data.

For detailed information on Dynamic*Access* technology products, go to:

http://www.3com.com/dynamicaccess

Bidirectional Load Balancing

Bidirectional load balancing maximizes bandwidth at the server through the use of multiple parallel resilient server links (RSLs) that share the network load.

An RSL consists of two or more NICs that form a *virtual NIC.* Each virtual NIC has multiple physical NICs bound to it, forming a *group.* Each NIC in a group uses the same protocols and frame types. One NIC is designated the *primary* NIC and the others *secondary* NICs.

Figure 3 Types of Load Balancing Arrangements

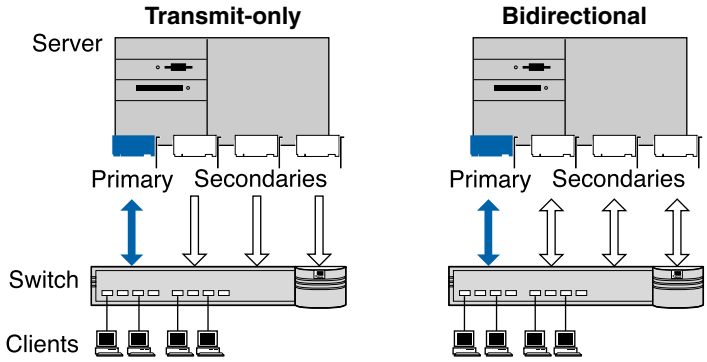

Self-Healing Drivers

Self-healing drivers (SHDs) work together with RSLs to maintain the network connection. An SHD monitors the NIC continuously for error conditions and makes corrections. These corrections can include resetting the NIC, rebuilding software data structures, temporarily disabling features, or transferring all network traffic to secondary NICs (termed a *failover event*). An SHD can also continuously monitor the status of the physical NICs in a virtual NIC group before and after failover. Errors and actions are reported to the system console and to the system log file. Error threshold values can be configured at any time.

Failover

In addition to load balancing, RSLs provide failover fault tolerance between a server and a switch—if one NIC in a group fails, the others assume the network load of the failed NIC. The failover behavior of secondary NICs depends on how you set load balancing:

- In a *transmit* load balancing arrangement, the primary NIC is the only one that receives packets. If the primary NIC fails, a secondary NIC assumes the configuration profile, network traffic, and active status of the failed primary NIC.
- In a *bidirectional* load balancing arrangement, all NICs receive packets. If any NIC fails, receive load balancing is disabled, and the other NICs continue transmit-only load balancing activity. Receive load balancing is restored when new connections are established with clients.

Bidirectional load balancing is restored after a failure when applications create new connections and new clients log in.

Figure 4 Bidirectional Load Balancing Failover

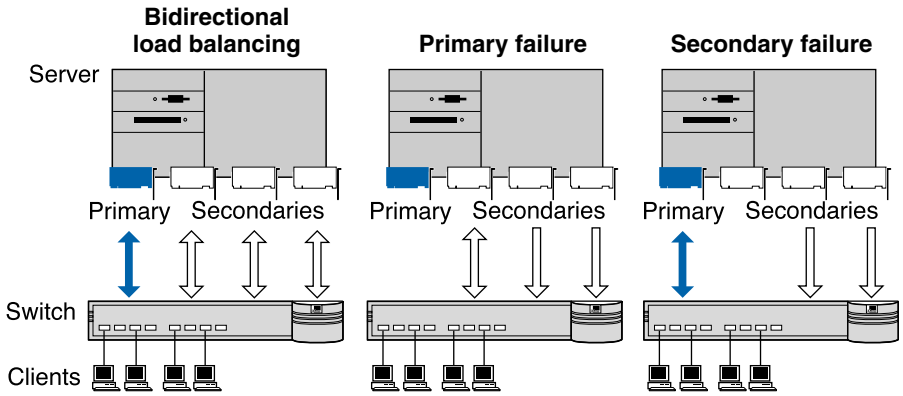

VLANs

A VLAN is a group of location-independent and topology-independent devices that communicate as if they were on the same physical LAN. Network devices on different LAN segments and of different media types can be members of the same VLAN. Membership in a VLAN is determined by a VLAN tag that is transmitted with the Ethernet frame for use by a switch.

With VLANs, you can define a network according to:

- Organizational groups—For example, you can have one VLAN for the Marketing department and one for the Finance department.
- Application groups—For example, you can have one VLAN for e-mail users and one for multimedia users.

Implementing VLANs on a network has these advantages:

- It eases the change and movement of devices on IP networks.

  With traditional IP networks, if users move to a different IP subnet, the IP addresses of each workstation must be updated manually. With VLANs installed, if an end station on VLAN 1 is moved to a port elsewhere on the network, you need only to specify that the new port is on VLAN 1.

- It helps to control traffic.

  With traditional networks, congestion can be caused by broadcast traffic that is directed to all network devices whether they require it or not. Each VLAN can be set up to contain only those devices that need to communicate with each other, increasing network efficiency.

- It provides extra security.

  Devices within each VLAN can communicate only with member devices in the same VLAN. If a device in VLAN 1 needs to communicate with devices in VLAN 2, the traffic must cross a router.

The Dynamic*Access* technology multiple VLAN capability supports IEEE 802.1Q VLAN tagging and works with any switch that is compliant with IEEE 802.1Q specifications. See your Ethernet switch documentation for more information on IEEE 802.1Q VLANs.

Server Features Using Other NICs

Two *foreign NICs* (two that are not 3Com EtherLink Server NICs) are allowed per server. For guidelines on using foreign NICs, see these topics:

- **Windows NT and Windows 2000**—Planning Groups and VLANs on page 17.
- **NetWare**—Planning the Configuration on page 34.

Hot Plug NIC Installation

If your computer supports PCI hot plug specifications, you can add a new 3Com NIC or remove and replace a 3Com NIC without turning off power to the computer. Hot plug NIC installation allows you to expand connections without taking the computer out of service and makes troubleshooting faster and easier because you do not need to wait for the computer to reboot.

For instructions on performing a hot plug NIC installation, refer to your computer documentation and to the HOTPLUG.TXT file in the HELP directory on the 3Com EtherLink Server CD.

Remote Wake-Up (Single Port Models Only)

Remote Wake-Up is the ability to remotely power-on a computer for after-hours administration.

If the computer is compliant with PCI 2.2, Remote Wake-Up is automatically enabled through the PCI bus. If the computer is compliant with PCI 2.1, Remote Wake-Up support is enabled by connecting a Remote Wake-Up cable from the NIC Remote Wake-Up (RWU) connector to a 3-pin Remote Wake-Up connector on the computer motherboard.

The following items are needed to use Remote Wake-Up:

- Management application that supports Remote Wake-Up
- BIOS that supports Remote Wake-Up
- PCI 2.2-compliant bus or a 3-pin Remote Wake-Up connector on the computer motherboard and a 5-volt standby power supply unit rated at a minimum of 375 milliamperes
- A power supply in the computer that can support multiple Remote Wake-Up devices (to use multiple NICs as Remote Wake-Up NICs in the same computer)

If you are unsure whether the computer meets the requirements listed above, refer to the computer documentation or contact the computer manufacturer.

For more information on Remote Wake-Up, including a list of computers that currently support this feature, go to:

http://www.3com.com/partners/acpi

Managed PC Boot Agent (MBA) Software

The Managed PC Boot Agent (MBA) software adds management capabilities to the NIC, enabling the computer to boot from the server, rather than from its local drive.

This preboot support allows you to use management applications to perform the following tasks remotely:

- Install and configure a new computer that has never been connected to the network.

- Upgrade software.
- Configure or reconfigure multiple systems simultaneously.
- Scan for viruses.
- Back-up hard drives and perform disaster recovery tasks.

For information on configuring the MBA to boot from the network, see Configuring the Managed PC Boot Agent (MBA) on page 45.

For detailed information on the MBA, see the *Managed PC Boot Agent User Guide,* located with the MBA software on the 3Com EtherLink Server CD.

Desktop Management Interface (DMI) 2.0

DMI 2.0 enables managed computers and net computers to report details about themselves and their peripheral devices across the network to a DMI 2.0-compliant management application.

A network administrator can then use this information to configure and manage a client or server computer remotely.

For instructions on installing the 3Com DMI Agent, see Installing the 3Com DMI Agent on page 59.

For more detailed information on DMI, go to:

http://www.3com.com/managedpc

Remote System Alerts

The NIC can be configured to continuously transmit a packet to an alert target management station. If the management station fails to receive the regularly scheduled packet, an alert can be triggered that signals a possible computer power loss or theft.

The NIC can also transmit a workgroup keep-alive packet periodically while the computer is in a sleep state. This packet prevents the computer workstation address from being aged-out of switch router tables.

2 INSTALLING AND CONNECTING THE NIC

Safety Precautions

Observe the following safety precautions:

WARNING: *Computers operate with voltages that can be lethal. Before removing the cover, turn off the computer and unplug it. Disconnect all cables that are connected to the main system unit. Remove jewelry from your hands and wrists. Use insulated or nonconductive tools.*

CAUTION: *The NIC is packed in an antistatic container to protect it during shipment. Do not touch the components or any metal parts on the NIC, except for the backplate. To avoid damaging the NIC or the computer, reduce static electricity on your body by wearing an electrostatic discharge wrist strap attached to the chassis or by touching an unpainted metal part of the chassis before unplugging the computer and before handling the NIC.*

CAUTION: *Install the NIC in a PCI slot that conforms to PCI 2.1 or higher specifications. Do not attempt to install the NIC in an ISA or EISA slot. Doing so may damage the NIC and the computer.*

WARNING: *Make sure that the computer power cord is unplugged. Only properly trained and authorized personnel should perform service. Contact the computer manufacturer for information about safe service techniques.*

Installation Requirements

The following items are required for hardware and software installation:

- **NIC**—At least one 10/100 NIC.
- **Processor**—Intel-based CPU (Pentium-class processor).
- **Server RAM**—128 megabytes minimum; 256 megabytes recommended.
- **PCI slot**—For each NIC, one bus master slot that conforms to PCI 32/64-bit specifications, revision 2.1 or 2.2.
- **Drive**—CD-ROM.
- **Cable**—Category 5 UTP (for 100 Mbps operation).
- **Connector**—RJ-45, one or two ports.
- **Software**—One 3Com EtherLink Server CD with Dynamic*Access* technology software and network drivers.

- **Operating system**—Base drivers and Dynamic*Access* software are available for the following operating systems:
  - Microsoft Windows NT version 4.0 with the most recent Service Pack available from Microsoft technical support (www.microsoft.com).
  - Microsoft Windows 2000 with the most recent Service Pack available from Microsoft technical support (www.microsoft.com).
  - Novell NetWare version 4.2 or 5.x with the most recent patches and updates available from Novell technical support (www.novell.com).

  Base drivers are also available for the following operating systems:
  - SCO UnixWare 7 available on the 3Com Web site (http://support.3Com.com/infodeli/tools/nic/SCO.htm).
  - SCO OpenServer 5 available on the 3Com Web site (http://support.3Com.com/infodeli/tools/nic/SCO.htm).
  - Linux available on the 3Com Web site (http://support.3Com.com/infodeli/tools/nic/linux.htm).



Check the 3Com Web site (http://support.3Com.com/infodeli/tools/nic) for other supported drivers.

- **Computer BIOS**—Latest version. Contact the computer manufacturer to verify.
- **Remote Wake-Up**—For requirements, see Remote Wake-Up (Single Port Models Only) on page 5.

Preparing the NIC and the Computer

Observe the precautions listed in Safety Precautions on page 7. Follow these preparation steps:

1. Decide if you want to use the Remote Wake-Up feature.

   If you want to use the Remote Wake-Up feature on a computer that is compliant with PCI 2.1, you must obtain a Remote Wake-Up cable for the NIC (for details, see Remote Wake-Up (Single Port Models Only) on page 5). If the computer is compliant with PCI 2.2, Remote Wake-Up is automatically enabled through the PCI bus and no Remote Wake-Up cable is required.

2. Make sure that cable requirements are met.

   The RJ-45 port provides a 10 Mbps or 100 Mbps connection automatically, depending on the speed of the connected hub or switch.

   The following table shows the cable requirements and maximum network cable lengths for the RJ-45 port.

Network Environment	Cable Required	Maximum Cable Length
10 Mbps (10BASE-T)	Category 3, 4, or 5 unshielded twisted-pair	100 m (328 ft)
100 Mbps (100BASE-TX)	Category 5 unshielded twisted-pair	100 m (328 ft)

3 Unpack and inspect the NIC for damage.

4 Exit all open applications and user processes.

5 Turn off the power to the computer and attached devices.

6 Unplug the power cables from the power source.

7 Remove the computer cover.

8 Locate an empty, nonshared bus-mastering PCI slot and remove its slot cover. Save the screw, if there is one.

   Do not install the NIC in a shared PCI slot. Avoid any PCI slot next to an ISA slot. This is often a shared slot and does not support bus mastering.

   If you do not know how to identify a PCI slot, check the computer documentation or ask the system administrator.

   If you are planning to install the Remote Wake-Up cable, choose an empty PCI slot that is close to the matching connector on the computer motherboard. The Remote Wake-Up cable is required only if the computer is compliant with PCI 2.1 and you want to use the Remote Wake-Up. The cable is not required if the computer is compliant with PCI 2.2.

9 Write down the MAC address of the NIC and note the relative position of the intended PCI slot.

   This information is helpful when you are installing the network drivers and connecting the cables to the hub or switch. The MAC address is the 12-digit hexadecimal number printed on the small bar code label on the component side of the NIC.

   The next step is to install the NIC in the computer and connect it to the network.

Installing and Connecting the NIC

Observe the safety precautions listed in Safety Precautions on page 7.

Prepare the NIC and the computer as described in Preparing the NIC and the Computer on page 8.

The following instructions apply to installing the NIC in most computers. If these instructions are not appropriate for your computer, refer to the documentation that accompanied the computer.

Figure 5 Installing and Connecting the NIC

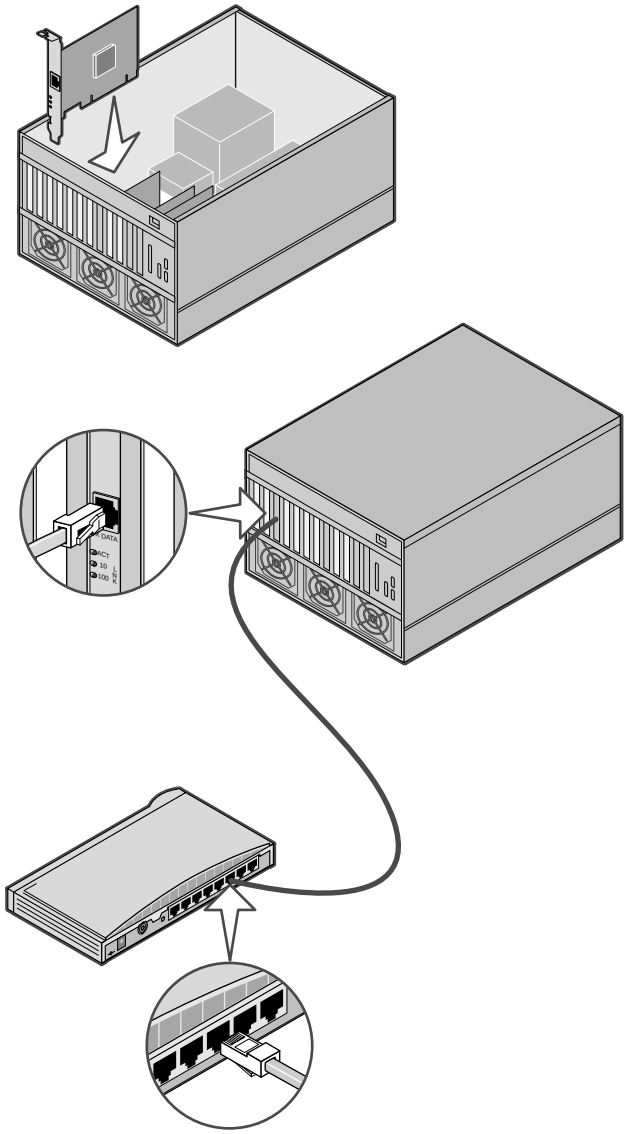

1 Carefully insert the NIC into an empty PCI slot.

   Press firmly to ensure that the NIC is fully seated in the slot. Secure the NIC with the screw if you removed one earlier.

2 Follow these steps only if you need to connect a Remote Wake-up cable:

   - Make sure that the NIC is properly installed in a PCI slot.
   - Insert the Remote Wake-Up cable in the RWU connector on the NIC.

     Twist the cable two times before attaching the cable to the computer.
   - Attach the other end of the cable to the connector on the computer motherboard. Refer to the computer documentation if you need help locating the connector.

3 Replace the computer cover and plug in the power cord.

   Do not turn on the power to the computer.

4 Plug the RJ-45 connector on the twisted-pair network cable into an RJ-45 port on the NIC backplate.

   If you are installing a dual port NIC, plug the first cable into Port A on the NIC backplate.

5 Connect the other end of the network cable to an active network port.

   The next step is to install the software.

If your site network installation procedures require you to verify that installed hardware is functional before you install software, run the 3C90XCFG.EXE DOS diagnostics program before installing the driver. This program is located on the 3Com EtherLink Server CD.

Figure 6 Connecting a Remote Wake-up Cable (PCI 2.1 only)

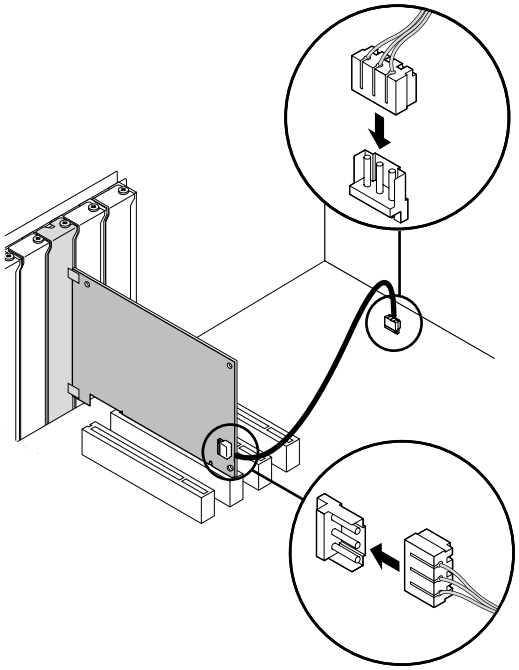

Installing Software

See the following topics for requirements and instructions on installing software in various operating systems:

- Installing and Configuring in Windows on page 13
- Updating Software in Windows on page 16.
- Installing and Configuring in NetWare on page 27

Obtaining Installation Diskettes

If your computer does not have a CD-ROM drive, access a computer that has a CD-ROM drive and use the installation utilities to create installation diskettes from files on the 3Com EtherLink Server CD.

If you do not have access to a computer that has a CD-ROM drive, you can download the drivers from the 3Com web site:

http://www.3com.com/

Creating Diskettes in Windows

Use the installation utilities on the *3Com EtherLink Server CD* to create installation diskettes. The installation diskettes allow you to install drivers, diagnostics, Dynamic*Access* technology server features, and associated text files. The installation diskettes do not contain the user guide that is available on the *3Com EtherLink Server CD*.

You will need five blank formatted diskettes.

To create the installation diskettes:

1. Turn on the power to the computer and start Windows.
2. Insert the *3Com EtherLink Server CD* in the CD-ROM drive.
3. On the Welcome screen, click on *NIC Software*.
4. Click *Installation Utilities*.
5. Click on *Create Installation Diskettes*.
6. Follow the prompts to copy files to the diskettes.

3 Installing and Configuring in Windows

Software Installation Requirements

Before you install software, you may want to verify that the installed server NICs are functional or change their configuration settings by running DOS diagnostics. Use the 3C90XCFG.EXE program located on the *3Com EtherLink Server CD*.

If you are installing the software during the installation of the network operating system, see Installing a 3Com NIC While Installing the NOS on page 57.

For a list of installation requirements, see Installation Requirements on page 7.



The installation instructions assume you are using the Windows Auto Run feature. If the Welcome screen does not come up automatically, you can perform the installation by running begin.exe.

Getting Help

To display the Help system during the software installation, click *Help* on any 3Com window.

Installing in Windows NT

Before you begin software installation:

- Make sure that all installation requirements are met. See Installation Requirements on page 7.
- Install the hardware. See Installing and Connecting the NIC on page 9.

Use the following procedure to install the driver and diagnostics for the first time in a computer that is running Windows NT. (If you are updating a previous installation, see Updating Software in Windows on page 16.)

1. Boot the computer and start Windows NT.
2. Log in to the Windows NT Administrator account.
3. Insert the *3Com EtherLink Server CD* in the CD-ROM drive.
4. From the Welcome screen, select *NIC Software*.
5. Click *NIC Drivers and Diagnostics*.
6. Follow the Wizard prompts.
7. Choose Typical or Custom Installation.

   The *Please Wait* screen appears. After the installation is completed, an Update dialog box appears.

8 Click OK.

The Setup Complete screen appears.

If your network environment uses the TCP/IP communications protocol, the Microsoft TCP/IP Properties dialog box appears. Enter the information needed to define an IP address. Continue after you have defined the TCP/IP settings.

9 Click Finish to complete the installation.

10 Click Exit.

11 Restart your computer for changes to take effect.

Installing in Windows 2000

Before you begin software installation:

- Make sure that all software installation requirements are met. See Installation Requirements on page 7.
- Install the hardware. For instructions, see Installing and Connecting the NIC on page 9.

Use the following procedure to install the driver and diagnostics for the first time in a computer that is running Windows 2000. (If you are updating a previous installation, see Updating Software in Windows on page 16.)

1 Reboot the computer, start Windows 2000, and log in to the Windows 2000 Administrator account.

The Windows 2000 Found New Hardware wizard detects the new NICs and begins the driver installation.

2 Insert the *3Com EtherLink Server CD* in the CD-ROM drive.

3 From the main menu, select *NIC Software*.

4 From the list on the left, click *NIC Drivers and Diagnostics*.

5 Follow the Wizard prompts.

6 Choose Typical or Custom Installation.

The *Please Wait* screen appears. After the installation is completed, an Update dialog box appears.

7 Click OK

The Setup Complete screen appears.

8 Click Finish to complete the installation.

9 Click Exit.

Configuring SHD Parameter Settings

Follow the procedure for your operating system.

Windows NT

1 Right-click My Network Places and select *Properties* from the menu.

2 In the next window, right-click a connection and select *Properties* from the menu.

3 Click *Configure*.

4 In the NIC Properties window, click the Advanced tab.

5 In the Advanced window, you can configure the SHD parameters. Select a parameter in the Property field and change its value in the Value field. Table 1 describes the SHD parameters. Default values are optimal for most networks.

Windows 2000

1 From the Windows Start menu, select Settings/Control Panel.

2 Double-click the Network icon.

3 In the Network window, click the Adapters tab.

4 Double-click the adapter you want to modify

5 Double-click a parameter to change its value. Table 1 describes the SHD parameters. Default values are optimal for most networks.



Slot numbers listed in the SHD Configuration window may not match those labeled on the mother board

6 When you are finished, click *OK*.

7 Remove the *3Com EtherLink Server CD* from the CD-ROM drive.

8 Restart the computer.

Table 1 SHD Parameters (Windows)

Field	Range of Values (Defaults in Bold)	Description
Self Check Level	Off, **Basic**, Enhanced	Basic level checking monitors Tx/Rx errors (see Sampling Window), link beat, and NIC hardware. Enhanced level adds maintenance of valid data structures and uses more CPU cycles. Basic level checking is forced when RSL is enabled. Off disables SHD.
Sampling Window	0–65536 packets 0 disables sampling. **1024**	This option specifies the number of Tx/Rx packets to be sampled for carrier lost, late collisions, jabbers, CRC, overruns, underruns, and bus contention errors. Setting the Sampling Window to 0 effectively disables all checking.
Sampling Ratio	0–100 percent **50**	Sampling Ratio establishes a rate of error accumulation. Every second, the error counters are diminished by the Sampling Ratio. The larger the Sampling Ratio, the more recent are the accumulated errors.
Error Tolerance	Low **Medium** High	Error Tolerance specifies threshold levels for Tx/Rx errors. An RSL failover or NIC reset occurs when the threshold is exceeded during the sampling period. Low = 5 of each error category Medium = 50 of each error category High = 100 of each error category
Alert Type (Windows NT)	Information Warning **Error**	Double-click to enable or disable alert types. Enabled types are reported to the Windows System Events monitor.

Table 1 SHD Parameters (Windows) (continued)

Field	Range of Values (Defaults in Bold)	Description
SHD Inform messages SHD Warning messages SHD Error messages (Windows 2000)	Enabled Disabled	Select a parameter in the Property field and change its value in the Value field. Enabled types are reported to the Windows System Events monitor.

Verifying Successful Installation

Follow the procedure for your operating system.

Windows NT

1. Double-click the My Computer icon, then the Control Panel icon, and then the Network icon.
2. Select the Adapters tab.
3. Make sure that the name of the NIC appears in the list of network adapters.

Windows 2000

1. Right-click My Network Places and select *Properties* from the menu.
2. Check connections in the Network and Dial-up Connections window.

Updating Software in Windows

The following procedures update a previous installation of the network driver and NIC diagnostics software in Windows.

Windows NT

1. Boot the computer and start Windows NT.
2. Log in to the Windows NT Administrator account.
3. Insert the *3Com EtherLink Server CD* in the CD-ROM drive.
4. From the Welcome screen, select *NIC Software*.
5. Click *NIC Drivers and Diagnostics*.

   The Please Wait screen appears.
6. Follow the Wizard prompts.
7. Choose Custom Installation.
8. Select the desired installation option.
9. Click Next.
10. Choose any advanced features you would like set.
11. Click Next.
12. Click OK.
13. Click Finish to complete the installation.

14 Click Exit.

15 Restart your computer for changes to take effect.

After you restart the computer, you may wish to configure self-healing drivers. To do so, bring up the Adapters tab in the Network window, select a NIC, and click *Properties*. For details on the SHD parameters, see SHD Parameters (Windows) on page 15.

Windows 2000

1 Reboot the computer, start Windows 2000, and log in to the Windows 2000 Administrator account.

The Windows 2000 Found New Hardware Wizard detects the new NICs and begins the driver installation.

2 Insert the *3Com EtherLink Server CD* in the CD-ROM drive.

3 From the Welcome screen, select *NIC Software*.

4 Click *NIC Drivers and Diagnostics*.

5 Follow the Wizard prompts.

6 Choose Custom Installation.

7 Select the desired installation option.

8 Click OK

The Setup Complete screen appears.

9 Click Finish to complete the installation.

10 Click Exit.

DynamicAccess Server Features

Dynamic*Access* technology server features allow you to configure load balancing groups and virtual LANs (VLANs). The features are described in Advanced Server Features on page 2.

The following Dynamic*Access* technology server features are available for NIC groups in Windows:

- Bidirectional load balancing
- RSL failover
- Multiple VLANs

The examples in this section illustrate typical actions you might take in the course of maintaining a Dynamic*Access* server configuration in Windows.

Planning Groups and VLANs

Consider these items when planning groups and VLANs:

- Decide whether you want to use bidirectional load balancing, or transmit load balancing.

  To use bidirectional load balancing, you must assign a dedicated IP address for each load balancing group. This address must be unique (not used elsewhere on the network). For details, see Specifying a Dedicated IP Address on page 21.

- Decide which NICs are to be part of each group. Each group must include at least two NICs.
- Decide whether you want to use a foreign NIC in one of the groups.

  Two foreign NICs (two that are not 3Com EtherLink Server NICs) are allowed in one group per server.
- Decide which NIC is to be the primary NIC in each group.
- You can specify failover from a Gigabit NIC to a 10/100 NIC. To ensure optimal performance, this type of failover requires that you disable load balancing for the group.
- For the best failover performance, turn the spanning tree feature off at switches that are connected directly to the server. If the spanning tree feature is turned on, a failover may be delayed up to 30 seconds while the switch processes the spanning tree algorithm.
- Plan the cable changes required to connect each primary NIC and all secondary NICs to the same network segment.
- Observe the recommended support limit of four groups per server.
- The following guidelines apply to groups under Windows 2000:

  802.1p Support Property—The value of the Windows 2000 802.1p Support property must be the same for all NICs in a group. For example, if this property is enabled for the primary NIC, it must also be enabled for all other NICs in the group.

  Microsoft Task Offload Support—It is possible to form a group of NICs that have different levels of support for Microsoft Task Offload features (TCP Checksum, TCP Segmentation, and IP Sec). In this case, the offload support is limited to the features supported by all NICs in the group. For example, if two NICs in a group support all offload features but one NIC supports only TCP Checksum, then offload support for the group is limited to TCP Checksum.
- Observe these VLAN configuration guidelines:
  - Assign a VLAN ID number to each VLAN. If you are not using a DHCP server, each VLAN that is using IP services requires an IP address and subnet mask.
  - Dynamic*Access* software supports as many as 16 VLANs per server.
  - Each VLAN bound to TCP/IP must exist on a separate IP subnet. DHCP servers used to allocate IP addresses must be located on the same IP subnets as the VLANs.
  - Each VLAN bound to the IPX/SPX protocol must use a unique network number.
  - Under Windows 2000, when VLANs are enabled, the Windows 2000 802.1p Support property must be disabled for all the underlying miniports.
  - A minimum of 128Mb of RAM is required for multiple VLAN configurations (up to a maximum of 16 VLANs). You can improve overall system performance with VLANs by increasing the physical RAM, the virtual memory page size, or both.

Installing DynamicAccess Software

Use the following procedure to install DynamicAccess technology server features in a computer that is running Windows NT or Windows 2000.

Installing teaming software from multiple vendors may cause problems with your system. Before installing DynamicAccess *software, uninstall any other teaming software you may have previously installed on your computer.*

1. Insert the *3Com EtherLink Server CD* in the CD-ROM drive.
2. From the Welcome screen, select *NIC Software*.
3. Click DynamicAccess *Technology*.
4. Click *Install* DynamicAccess *Server Software*.
5. Select Windows 2000 or Windows NT installation.
6. Click *OK* to Install the DynamicAccess server software.
7. Restart your system.

*When Dynamic*Access *server features are installed, NICs bind to the DynamicAccess protocol and real protocols bind to the Dynamic*Access *Miniport. Do not modify these bindings.*

Configuring Server Features

The DynamicAccess server features window contains tabs for these windows:

- In the Load Balance/RSL window, you can create and change Load Balancing/RSL groups. The NICs in a group work together to route traffic efficiently and to recover from failures.
- In the VLANs window, you can set up virtual LANs. All groups listed in the Load Balance/RSL window also appear as groups in the VLAN window. Any ungrouped NICs in the Load Balance/RSL window are also listed in the VLAN window.

Windows NT

Start DynamicAccess server features under Windows NT as follows:

1. Log in to the Windows NT Administrator account.
2. From the Windows *Start* menu, select *Settings/Control Panel*.
3. Double-click the DynamicAccess Server icon.

   The DynamicAccess Resilient Server Link/Load Balance/VLAN Configuration window appears. Click the appropriate tab to configure server features.

Windows 2000

Access DynamicAccess server features through the Windows 2000 Network and Dial-up Connections window as follows:

1. Log in to Windows 2000 with administrator privileges.
2. Launch the Windows 2000 Network and Dial-up Connections window.
3. Select a Local Area Connection icon.
4. Click the right mouse button and select Properties.

   The Local Area Connections Properties window appears.

5 Click the General tab.

6 In the General window, select Dynamic*Access* Protocol and click Properties.

The Dynamic*Access* Protocol Properties window appears. Click the appropriate tab to configure server features.

Creating a Group

1 Click the Load Balance/RSL tab.

2 In the Load Balance/RSL window, click *Create Group*.

3 In the Create Group dialog box, type a group name.

4 Set the load balancing:

To enable transmit load balancing—Check the *Transmit Load Balance Enabled* box.

To enable bidirectional load balancing—Check both the *Transmit Load Balance Enabled* box and the *Receive Load Balance Enabled* box. Enter only the Host ID bytes required for a dedicated IP address.

Do not use the group IP address as the dedicated IP address.

For example:

	Byte 1	Byte 2	Byte 3	Byte 4
Class A	Network ID	Host ID		
		24	1	253
Class B	Network ID		Host ID	
			2	253
Class C	Network ID			Host ID
				253

See Specifying a Dedicated IP Address for more information on the dedicated IP address.

To disable all load balancing—Clear the *Receive Load Balance Enabled* and the *Transmit Load Balance Enabled* check boxes.

5 Click *OK*.

The name of the new NIC group appears in the Load Balancing/RSL Groups list box.

Adding NICs to a Group

1. Click the Load Balance/RSL tab.
2. In the Load Balance/RSL window:
   - Select a group from the Load Balancing/RSL Groups list.
   - Select a NIC from the Network Interface Cards list.
3. Click *Add NIC*.

   The NIC appears as part of the group in the Load Balancing/RSL list box.

   If you click *Add NIC* repeatedly, NICs are added to the group in the order that they are listed after the first NIC you selected.

Specifying a Dedicated IP Address

Bidirectional load balancing requires that you specify a dedicated IP address for the load balancing group. This address specifies a Network ID and a Host ID, and it must be unique (not used elsewhere on the network). For example:

	Byte 1	Byte 2	Byte 3	Byte 4
Class A	Network ID	Host ID		
	125	24	1	253
Class B	Network ID		Host ID	
	139	25	2	253
Class C	Network ID			Host ID
	193	26	3	253

You can specify the dedicated IP address in the Create Group or Group Properties dialog boxes. You cannot specify the bytes for the Network ID; they are fixed. Specify the bytes for the Host ID for various classes of subnets as follows:

Class	**Byte 1**	**Specify only bytes**
A	126	2, 3, and 4 (the three rightmost boxes).
B	128–191	3 and 4 (the two rightmost boxes).
C	192–223	4 (the rightmost box).

Changing an IP Address

If another device is using the dedicated IP address of a bidirectional load balancing group, you must change either the IP address of the load balancing group or the IP address of the other device. Use the appropriate procedure below:

Changing the IP Address of the Other Device

After you change the IP address of the other device, restart receive load balancing as follows:

1. In the Load Balancing/RSL window, select the group that had the duplicate address.
2. Click *Properties*.
3. In the Properties dialog box, click *OK*.
4. In the Load Balancing/RSL window, click *OK* to exit the window and restart receive load balancing.

Changing the Dedicated IP Address of the Group

1. In the Load Balancing/RSL window, select the group that has the duplicate address.
2. Click *Properties*.
3. In the Properties dialog box, enter a new IP address and click *OK*.
4. In the Load Balancing/RSL window, click *OK* to exit the window and restart receive load balancing.

Creating a VLAN

1. Click the VLANs tab.
2. In the VLANs window, select a NIC or group from the VLANs list and click *Create VLAN*.
3. In the VLAN ID dialog box, type a VLAN ID number and click *OK*.

   Legal VLAN ID numbers are 1–511 and from 768–4095. Numbers in the range 512–767 are reserved.

   The new VLAN is added to the VLANs list.

   Windows NT—Restart the computer when the software prompts you to do so.

   Windows 2000—If you create more than one VLAN, assign a VLAN ID number to each VLAN as follows:

   - Right-click My Network Places and select *Properties* from the menu.
   - In the next window, right-click a VLAN and select *Properties* from the menu.
   - Click *Configure*.
   - In the NIC Properties window, click TCP/IP.
   - In the next window, configure the IP address and subnet mask.

Specifying Traffic Priorities (Windows NT 4.0 Only)

You can use the Dynamic*Access* Software Setup window to specify traffic priorities.

1. Double-click the 3Com Dynamic*Access* icon in the Windows Control Panel.

   The Dynamic*Access* Software Setup window appears.

2. Click the appropriate tab:

   - **Traffic Prioritization**—Prioritize applications to ease bottlenecks in the network and allow critical applications to take network precedence. You can turn traffic prioritization on or off independently for:
     - Each NIC that is not in a group and does not have VLANs
     - Each group that does not have VLANs
     - Each VLAN
     - Each virtual NIC (NIC, group, or VLAN) shown in the Traffic Prioritization control panel
   - **Administration**—Set Dynamic*Access* control panel access, set VLAN options, enable efficient multicast control, and enable the prioritizing of multicast traffic.



*For detailed information on Dynamic*Access *software, go to:*

http://www.3com.com/dynamicaccess

Saving the Configuration

To save and exit, click *OK*.

A prompt asks whether you want to configure traffic prioritization. If you click *Yes*, the Dynamic*Access* Software Setup window appears.

To exit without saving the configuration, click *Cancel*.

Disabling Load Balancing for a Group

1. Click the Load Balance/RSL tab.
2. In the Load Balance/RSL window:
   - Select a group from the Load Balancing/RSL Groups list.
   - Click *Properties*.
3. In the Group Properties dialog box:

   To disable receive load balancing only—Clear the *Receive Load Balance Enabled* check box.

   To disable all load balancing—Clear the *Receive Load Balance Enabled* and the *Transmit Load Balance Enabled* check boxes.
4. Click *OK*.

Changing the Primary NIC

The first NIC added to an empty group is automatically designated the *primary NIC*. NICs added subsequently are designated as *secondary* NICs. Primary status is indicated by a P icon at the beginning of the NIC name. When there are more than one NIC in a group, you can change the primary NIC as follows:

1. Click the Load Balance/RSL tab.
2. In the Load Balance/RSL window, select a secondary NIC from the Load Balance/RSL Groups list.
3. Click *Select Primary*.

   The NIC you selected becomes the primary NIC.

Removing a NIC from a Group

1. Click the Load Balance/RSL tab.
2. In the Load Balance/RSL window, select a NIC from a group in the Load Balancing/RSL Groups list.
3. Click *Remove NIC*.

Deleting or Editing a VLAN

When a VLAN is selected, you can delete it or edit its properties.

1. Click the VLANs tab.
2. In the VLANs window, select a VLAN.

   To delete the selected VLAN, click *Delete VLAN*.

   To edit the VLAN ID for the selected VLAN, click *Edit VLAN*.

Displaying NIC Properties

1. Click the Load Balance/RSL tab.
2. In the Load Balance/RSL window, select a NIC.
3. Click *Properties*.

   The NIC Properties window appears, showing the properties of the selected NIC.

Displaying Group Properties

1. Click the Load Balance/RSL tab.
2. In the Load Balance/RSL window, select a group in the Load Balancing/RSL Groups list box.
3. Click *Properties*.

   The Group Properties window appears, showing the properties of the selected group.

Specifying Failover from Gigabit to 10/100 PCI

You can specify failover from a Gigabit NIC to a 10/100 NIC. To ensure optimal performance, this type of failover requires that you disable load balancing for the group.

Troubleshooting a Load Balancing Configuration

Use the troubleshooting tips in Table 2 to solve problems that may occur in a load balancing configuration.



To access a database of technical information that can help you diagnose and solve NIC installation, configuration, and upgrade problems, go to:

http://knowledgebase.3com.com

Table 2 Troubleshooting Load Balancing In Windows

Symptom	Tip
Receive load balancing fails to begin functioning.	Check the Group Properties to verify that the dedicated IP address has been entered. If no address appears in the Group Properties dialog box, enter one to enable receive load balancing.
Receive load balancing stops functioning.	Cables may be disconnected, or there may be other hardware problems. Reconnect or change the cables. Correct any other hardware problems. Bidirectional load balancing is restored after this type of failure when applications create new connections and new clients log in.
Reconnecting cables does not restore load balancing.	Check the event log for a duplicate IP address. If another device is using the dedicated IP address of a load balancing group, change one of the IP addresses. See "Changing an IP Address" for instructions.
Receive load balancing does not function across a router.	Receive load balancing across a router is not supported. Clients across the router cannot use receive load balancing, but clients within the subnet get higher throughput from receive load balancing.

Changing Windows 2000 Property Settings

If you receive warnings about inconsistent property settings (for example, the 802.1p Support property) while creating a group, use the following procedure to change a NIC property:

1. Right-click the My Computer icon and select *Properties* from the menu.
2. Click the Hardware tab, then click *Device Manager*.
3. Double-click *Network Adapters*.
4. Right-click on the name of the appropriate NIC and select *Properties* from the menu.
5. Click the Advanced tab.
6. Select the appropriate property from the list (for example, 802.1p Support).
7. Use the scroll list to change the property value.
8. Exit the Device Manager.

Identifying Windows 2000 Miniport and LAN Connections

Dynamic*Access* miniport connections and NIC Local Area Connections are listed in the Network and Dial-up Connections window. If a group or VLAN is associated with a miniport, the group name and VLAN name appear in the miniport icon name.

4 INSTALLING AND CONFIGURING IN NETWARE

Software Installation Requirements

Before you install software, you may want to verify that the installed server NICs are functional or change their configuration settings by running DOS diagnostics. Use the 3C90XCFG.EXE program located on the 3Com EtherLink Server CD.

The instructions in this topic demonstrate the fundamentals of setting up a sample configuration. Setting up your own configuration may require a slightly different sequence of tasks and different numbers of NICs.

If you are installing the software during the installation of the network operating system, see Installing a 3Com NIC While Installing the NOS on page 57.

For a list of installation requirements, see Installation Requirements on page 7.

Netware Packet Receive Buffers

Follow these guidelines for NetWare 4.2 and 5.x:

The driver requires 200 packet receive buffers for each installed NIC. You must increase the minimum and maximum packet receive buffers values by 200 for each installed NIC. For example, if you install two NICs, increase the parameters in the STARTUP.NCF file by 400 as follows:

Before installing NICs	SET MINIMUM PACKET RECEIVE BUFFERS = 1000
	SET MAXIMUM PACKET RECEIVE BUFFERS = 2500
After installing two NICs	SET MINIMUM PACKET RECEIVE BUFFERS = 1400
	SET MAXIMUM PACKET RECEIVE BUFFERS = 2900

Slot Numbers for Multiple NICs

If you are installing more than one NIC on a server, you must know which NIC corresponds to a given PCI slot to connect a cable from the NIC to the appropriate port on the hub or switch. You can correlate slots with physical NICs by the NIC MAC addresses. (The MAC address is written on a bar code label on the top component side of the NIC.)

Obtaining Slot Numbers

The NetWare driver installation program requires you to enter a PCI *slot number* for each NIC. In older versions of NetWare software, the term slot number referred to the physical slot in which the NIC was installed in the server. Now, the slot number is a combination of the bus number, bus type, and the physical slot number. The value of a slot number can be 10001 or larger.

Follow this procedure to obtain slot numbers for a multi-NIC installation:

1. Install only one 3Com EtherLink Server NIC.
2. Follow the installation instructions in this chapter to load the 3Com EtherLink Server CD, copy the driver, and load the driver.

   You need not specify a slot number when only one NIC is installed.
3. In the Netware Console, issue a CONFIG command.
4. Write down the slot number that is listed for the installed 3Com EtherLink Server NIC.
5. Install the second 3Com EtherLink Server NIC.
6. Follow the installation instructions in this chapter to install the driver on the second NIC.

   Each time you load the driver, the CONFIG command displays the slot numbers for all the 3Com Server NICs in the system.

Installation and Configuration Instructions

With NetWare installed and the server up and running, complete the following steps to install and configure the driver and Dynamic*Access* technology server features on a NetWare file server.

In NetWare screens, use the arrow keys to select an item and then press Enter.

Load the 3Com EtherLink Server CD

NetWare 4.2

Insert the CD in the CD-ROM drive and enter these commands:

load cdrom

cd mount ecd210p980x

NetWare 5.x

Insert the CD in the CD-ROM drive and enter this command:

load cdrom

Wait for the message that states the CD is mounted successfully, and then proceed to copy the driver.

Copy the Driver

1. Enter this command at the prompt:

   NetWare 4.2: **`load install`**

   NetWare 5.x: **`load nwconfig`**
2. In the Configuration Options screen, select *Driver options*.
3. In the Driver Options screen, select *Configure network drivers.*
4. In the Additional Driver Actions screen, select *Select a driver.*

   The Select a Driver screen appears, listing all previously saved drivers in the system.



If this is the first installation of the 3Com server NIC driver, it does not appear in this list

5. Press Insert.

   A system message for selecting a disk drive appears.
6. Press F3.

7 Enter a path to the volume that contains the driver. For example:

```
ecd210p980x:/nwserver
```

The Select a Driver to Install screen appears with the 3Com EtherLink Server NIC driver name highlighted.

8 Press Enter to select the driver.

9 Select *Yes* at the prompt to confirm the name of the driver to copy.

The installation program copies the driver to the appropriate server subdirectory. The Configuration screen appears.

Specify the Slot Number

You need not specify the slot number if you are installing only one NIC.

1 In the Configuration screen, select *Slot Number*.

2 Enter the slot number of the NIC that you want to install. For example:

```
10001
```

See Changing NetWare Driver Configuration Parameters for instructions on changing other parameters in this screen.

Load the Driver

1 Select *Save parameters and load driver*.

The installation program loads the configured driver and then writes the appropriate LOAD and BIND commands to the AUTOEXEC.NCF file.

The system assigns a network number.

2 Enter a network number, or press Enter to select the system-assigned number.

If no errors are encountered, the installation program asks whether you want to select an additional network driver.

3 Select *Yes* to set up another NIC.

Set Up Another NIC

1 Follow the prompts for another NIC:

- Select the driver
- Enter the slot number
- Save parameters and load the driver

2 Repeat the process for all NICs to be set up.

3 After all NICs are set up, press Esc several times to return to the Installation Options screen.

Install Server Features

Two drivers are associated with Dynamic*Access* technology server features under NetWare: SE and LBRSL.

1. From the Configuration Options screen select *Product options*.
2. Select *Install a product not listed*.

   The following message appears:

   ```
   Product will be installed from A:\. If you are installing
   from floppy, insert the first diskette of the product you
   want to install into the drive and verify that the path
   above is correct.

     Press <F3> to specify a different path;
     Press <ENTER> to continue.
   ```

3. Press F3.
4. Enter this path:

   ecd210p980x:\nwserver

   The following message appears:

   ```
   Product "3Com DynamicAccess Server Features" was found.
   Verify that this is the product you want to install before
   proceeding.

     Press <ENTER> to continue.
     Press <ESC> to abort installation.
   ```

5. Press Enter.

   The system copies the Dynamic*Access* technology server features software to the SYS volume.

Configure Groups

1. Press Esc to return to the Installation Options screen.
2. From the Configuration Options screen, select *NCF files options (create/edit server startup files)*
3. Select *Edit AUTOEXEC.NCF file*.
4. Make the following changes to the AUTOEXEC.NCF file:
   - Add a command to load the SE and LBRSL drivers before any commands to load LAN drivers. For example:

     load se

     load lbrsl

   - Add or verify the LOAD commands for the LAN drivers for all slot-frame instances.
   - For each Load Balancing/RSL group, load the same protocols and frame types on the primary and all secondary NICs.
   - On the primary NIC only, bind a protocol to each slot-frame instance.
   - Remove any protocol BIND commands from each secondary NIC.

- For each group, add an LBRSL GROUP command to group the primary and secondary NICs together. There can be only one LBRSL GROUP command per group, and it must list the primary and all secondary NICs. Place this command after the LAN driver.

If INETCFG is used, all adapters will have protocol bindings. You will have to unbind all secondary adapters in the AUTOEXEC.NCF file.

To specify a load balancing group with resilient server links, use the LB option. To specify a resilient server link group without load balancing, use the RSL option.

For the LBRSL GROUP command syntax, see Server Feature Commands on page 37.

For more information on maintaining the group configuration, see Configuring Groups on page 34.

5 Save the AUTOEXEC.NCF file and return to the server prompt.

The sample AUTOEXEC.NCF file in Figure 7 shows a group of two NICs. The primary NIC in slot 10001 is bound to a secondary NIC in slot 10002.

Figure 7 AUTOEXEC.NCF File for One Group of Two NICs

```
load se
load lbrsl

;Define primary NIC slot-frame instances
load 3c980 slot=10001 frame=ethernet_802.2 name=p1_802.2
load 3c980 slot=10001 frame=ethernet_ii name=p1_ii

;Define secondary NIC slot-frame instances
load 3c980 slot=10002 frame=ethernet_802.2 name=p2_802.2
load 3c980 slot=10002 frame=ethernet_ii name=p2_ii

;Bind protocols to primary NIC
bind ipx to p1_802.2 net=FF02
bind ip  to p1_ii  address=192.1.1.1 mask=ff.ff.ff.00

;Create a group with NIC 10001 primary and NIC 10002 secondary
lbrsl group lb 10001 10002
;To create a resilient server link group without load balancing (for
;use with NICs from manufacturers other than 3Com) use the rsl option:
;lbrsl group rsl 10001 10002
```

Verify the Installation and Configuration

To verify that the driver has been properly loaded on the NetWare server, perform the following procedure:

1 At the system prompt, enter:

`load monitor`

The NetWare Monitor screen appears.

2 From the *Available Options* menu, select *LAN/WAN Drivers*.

The *Available LAN Driver* menu appears. If the driver has been properly loaded, the driver and frame types associated with the driver appear on this menu.

3 Select a driver to view its associated statistics.

A functioning driver displays packets being sent and received.

To verify that the server is communicating over the network, perform the following procedure:

1 Set up a NetWare client on a LAN supported by the server to be tested.

2 Log in or map to the server.

If you cannot log in or map to the server, the link is not functional.

If the link is functional, the following message appears on the server console:

```
Link integrity test for primary slot #XXXXX passed.
```

Changing NetWare Driver Configuration Parameters

You can change parameters from the NetWare installation program Configuration screen. Table 3 lists the parameters shown on the Configuration screen.

Table 3 NetWare Installation Program Configuration Parameters

Parameter	Range of Values (Defaults in Bold)	Description
Slot Number	All PCI slot numbers valid to the system	Represents the PCI slot number of the physical NIC to be configured.
Node Address	Default is factory-assigned MAC address.	Leave blank to use factory-assigned default.
Log Message Level	**Error messages logged** Message logging disabled	Determines which type of messages are displayed to the system console and the SYS:\SYSTEM\SYS$LOG.ERR file.
Receive Checksumming	Enabled **Disabled**	NetWare 5.x only. Select *Enabled* to allow the NIC to perform checksum operations on incoming packets.
Transmit Checksumming	Enabled **Disabled**	NetWare 5.x only. Select *Enabled* to allow the NIC to perform checksum operations on outgoing packets.
SHD Configuration	Configure SHD **Use default configuration**	Select *Configure SHD* to change self-healing driver settings.
Check Level	**Basic Level Checking** All Checking is Disabled Enhanced Level Checking Basic and Enhanced	Appears when *Configure SHD* is selected. Basic Level Checking monitors link beat, DMA FIFOs, interrupt availability, bus contention errors, internal NIC subsystems, and recoverable Tx/Rx errors (CRC, Tx underruns, Rx overruns, late collisions, jabbers). Enhanced Level Checking maintains valid data structures and uses more CPU cycles.
Transmit/Receive Error Threshold	1–64000 **50**	Appears when *Configure SHD* is selected. Specifies threshold levels for Tx/Rx errors. A failure is reported when the threshold is exceeded during the sampling period.
Sampling Window Size	0–64000 packets 0 = disabled **1024**	Appears when *Configure SHD* is selected. Specifies the number of Tx/Rx packets to be sampled for late collisions, receive overruns, transmit underruns, jabbers, and bus contention errors. Automatically ages error count to ensure that only recent errors are accumulated.

Follow these steps to change parameters:

1. From the Configuration screen, select *Select/Modify driver parameters and protocols*.

   The Select a Protocol box is selected.

2. To add a network protocol, select the desired protocol from the Protocols box and press Enter.

   IPX is the default protocol. If you select TCP/IP, supply the TCP/IP addresses as follows:

   - Type the IP address.
   - Type the IP subnet mask.
   - Press Enter to continue.

3. Enter the slot number.

   The slot number is the PCI slot number of the physical NIC.

   The following fields appear:

   - Node Address
   - Log Message Level
   - SHD Configuration



When multiple NICs are installed, you must determine which physical NIC corresponds to which PCI slot to correctly connect the cables to the hub or the switch.

4. Press F3 to set the frame types.

   Use the arrow keys to select frame types. Select as many of the supported frame types as required. Adding frame types after exiting the installation program is best done by editing the AUTOEXEC.NCF file. The default is 802.2 only. Ethernet_802.3, Ethernet_II, and Ethernet_SNAP frame types are also supported.

5. To use the default MAC address of the NIC, leave the Node Address field blank.

   The default MAC address is recommended for most installations.

6. Select *Log Message Level* and press Enter.

7. Select which messages to log from the pop-up box and press Enter.

   All messages are printed to the system console screen and to the SYS:\SYSTEM\SYS$LOG.ERR file. All messages are logged by default.

8. Set receive checksumming.

   This parameter applies only to NetWare 5.x. It must be disabled in NetWare 4.2.

9. Set transmit checksumming.

   This parameter applies only to NetWare 5.x. It must be disabled in NetWare 4.2.

10 To configure the SHD:

From the SHD Configuration field, select *Configure SHD*.

The following SHD parameter fields appear:

Check Level

Transmit/Receive Error Threshold

Sampling Window Size

The default values of the SHD parameters are optimal for most networks. See Table 3 for explanations of the parameters.

11 When you have set all the configuration values, select *Save parameters and load driver*.

The installation program loads the configured driver and then writes the appropriate LOAD and BIND commands to the AUTOEXEC.NCF file. The system assigns a network number.

12 Enter a network number, or press Enter to select the system-assigned number.

If no errors are encountered, the installation program asks whether you want to select an additional network driver.

13 Continue with the installation:

If you are installing only one NIC, select *No* to finish loading and exit.

If you are installing more than one NIC, select *Yes* to set up another NIC.

Configuring Groups

Dynamic*Access* technology server features allow you to configure load balancing groups. The load balancing features are described in Advanced Server Features on page 2.

The following Dynamic*Access* technology server features are available for NIC groups in NetWare:

- Bidirectional load balancing
- RSL failover

The examples in this section illustrate typical actions you might take in the course of maintaining a Dynamic*Access* server configuration under NetWare. They show how to add NICs and groups to a server where Dynamic*Access* technology server features are already installed and configured.

Two drivers are associated with Dynamic*Access* technology server features in NetWare: SE and LBRSL.

Planning the Configuration

- Plan the cable changes required to connect each primary NIC and all secondary NICs to the same network segment.
- For optimal failover performance, turn the spanning tree feature off at switches that are connected directly to the server. If the spanning tree feature must be turned on, a failover may be delayed up to 30 seconds while the switch processes the spanning tree algorithm.
- Decide which NICs are to be part of each group. Each group must include at least two NICs.

- Decide whether you want to use a foreign NIC in one of the groups.

  Two foreign NICs (two that are not 3Com EtherLink Server NICs) are allowed in one group per server.
- Decide which NIC is to be the primary NIC in each group.
- Decide whether groups are to perform load balancing:
  - Load balancing groups provide failover and share the network load.
  - Resilient server link groups provide failover, but do not share the network load.
- To use bidirectional load balancing, you must assign a dedicated IP address for each load balancing group. This address must be unique (not used elsewhere on the network).
- Obtain the slot numbers of the NICs. You need these numbers if you are installing more than one NIC. See Obtaining Slot Numbers on page 27 for instructions.

Adding a Secondary NIC to a Group

1. Install the new secondary NIC.

   Follow the procedures in Installing and Connecting the NIC on page 7.

   Connect the new secondary NIC to the network that is used by the group.
2. Make the following changes to the AUTOEXEC.NCF file:
   - Add or verify the LOAD commands for the LAN drivers for all slot-frame instances.
   - Load the same protocols and frame types on the new secondary NIC.
   - Add the slot number of the new secondary NIC to the LBRSL GROUP command.
3. Reboot the server.

   The sample AUTOEXEC.NCF file in Figure 8 shows a group of three NICs. The primary NIC in slot 10001 is bound to two secondary NICs in slot 10002 and slot 10003.

Figure 8 AUTOEXEC.NCF File for One Group of Three NICs

```
load se
load lbrsl

;Define primary NIC slot-frame instances
load 3c980 slot=10001 frame=ethernet_802.2 name=p1_802.2
load 3c980 slot=10001 frame=ethernet_ii  name=p1_ii

;Define secondary NIC slot-frame instances
load 3c980 slot=10002 frame=ethernet_802.2 name=p2_802.2
load 3c980 slot=10002 frame=ethernet_ii  name=p2_ii
load 3c980 slot=10003 frame=ethernet_802.2 name=p3_802.2
load 3c980 slot=10003 frame=ethernet_ii  name=p3_ii

;Bind protocols to primary NIC
bind ipx to p1_802.2 net=FF02
bind ip  to p1_ii  address=192.1.1.1 mask=ff.ff.ff.00

;Create a group with NIC 10001 primary and NICs 10002 and 1003 secondary
lbrsl group lb 10001 10002 10003
;To create a resilient server link group without load balancing (for
;use with NICs from manufacturers other than 3Com) use the rsl option:
;lbrsl group rsl 10001 10002 10003
```

Adding a Group

1. Install the NICs.

   Follow the procedures in Installing and Connecting the NIC on page 7.

   Connect all NICs in the group to the same network.

2. Make the following changes to the AUTOEXEC.NCF file:

   - Add or verify the LOAD commands for the LAN drivers for all slot-frame instances.
   - In each group, load the same protocols and frame types on the primary and all secondary NICs.
   - On the primary NIC only, bind a protocol to each slot-frame instance.
   - Remove any BIND commands from each secondary NIC.
   - For each group, add an LBRSL GROUP command to group the primary and secondary NICs together. There can be only one LBRSL GROUP command per group, and it must list the primary and all secondary NICs. Place this command after the LAN driver.



If INETCFG is used, all adapters will have protocol bindings. You will have to unbind all secondary adapters in the AUTOEXEC.NCF file.

To specify a load balancing group with resilient server links, use the LB option. To specify a resilient server link group without load balancing, use the RSL option.

For the LBRSL GROUP command syntax, see Server Feature Commands.

3 Reboot the server.

The sample AUTOEXEC.NCF file in Figure 9 shows one group of three NICs and one group of two NICs. The primary NIC in slot 10001 is bound to two secondary NICs in slot 10002 and slot 10003. The primary NIC in slot 10004 is bound to the secondary NIC in slot 10005.

Figure 9 AUTOEXEC.NCF File for Two Groups of NICs

```
load se
load lbrsl

;Define Group 1 primary NIC slot-frame instances
load 3c980 slot=10001 frame=ethernet_802.2 name=p1_802.2
load 3c980 slot=10001 frame=ethernet_ii  name=p1_ii

;Define Group 1 secondary NIC slot-frame instances
load 3c980 slot=10002 frame=ethernet_802.2 name=p2_802.2
load 3c980 slot=10002 frame=ethernet_ii  name=p2_ii
load 3c980 slot=10003 frame=ethernet_802.2 name=p3_802.2
load 3c980 slot=10003 frame=ethernet_ii  name=p3_ii

;Define Group 2 primary NIC slot-frame instances
load 3c980 slot=10004 frame=ethernet_802.2 name=p4_802.2
load 3c980 slot=10004 frame=ethernet_ii  name=p4_ii

;Define Group 2 secondary NIC slot-frame instances
load 3c980 slot=10005 frame=ethernet_802.2 name=p5_802.2
load 3c980 slot=10005 frame=ethernet_ii  name=p5_ii

;Bind protocols to primary NICs
bind ipx to p1_802.2 net=FF02
bind ip  to p1_ii  address=192.1.1.1 mask=ff.ff.ff.00
bind ipx to p4_802.2 net=FF04
bind ip  to p4_ii  address=192.1.2.1 mask=ff.ff.ff.00

;Create Group 1 with NIC 10001 primary
;and NICs 10002 and 10003 secondary
lbrsl group lb 10001 10002 10003

;Create Group 2 with NIC 10004 primary
;and NIC 10005 secondary
lbrsl group lb 10004 10005

;To create resilient server link groups without load balancing
;use the rsl option:
;lbrsl group rsl 10001 10002 10003
;lbrsl group rsl 10004 10005
```

Server Feature Commands

Dynamic*Access* server feature commands for NetWare can be used to create sophisticated configurations of groups and for troubleshooting. You can enter them at the NetWare command line or add them to the appropriate NCF file. The commands are summarized below.

As shown in the examples, all commands are preceded by the keyword **lbrsl**.

group

This command creates groups from specified slot parameters for primary and secondary NICs.

Syntax lbrsl group lb addr *RxIPAddr pri_slot sec_slot* [*sec_slot* ...]

lbrsl group rsl *pri_slot sec_slot* [*sec_slot*...]

where:

lb specifies a load balancing group.

rsl specifies a resilient server link group.

RxIPAddr is a dedicated IP address for the load balancing group

pri_slot is the PCI slot number of the primary NIC.

sec_slot is the PCI slot number of a secondary NIC.

Example lbrsl group lb addr 192.1.1.100 10001 10002

lbrsl group rsl 10001 10002

Default None

display status

This command displays information about all groups, or if a primary slot parameter is specified, about only the specified group. A separate message is displayed for each loaded frame type. Board numbers are also displayed. Information about the relationship between the board numbers and the frame types is shown in the NetWare 5 Console Monitor. On the Available Options screen, select LAN/WAN drivers for this information.

Syntax lbrsl display status [*pri_slot*]

where:

pri_slot is the PCI slot number of the primary NIC in the group for which information is to be displayed. If this parameter is not specified, information for all groups is displayed. An example of the type of information displayed follows:

Group NNN (LB group)

Primary board id: Original NNN, Current NNN

Load balancing on incoming IP packets: Enabled; IP Rx Addr: NN.NN.NN.NN

Primary node address: XX:XX:XX:XX:XX:XX

Timeout values in seconds: send NNN, receive NNN, wait NNN, link NNN

Probe Interval: NNN seconds

Slot number NNN (Active), Node Address: XXX:XXX:XXX:XXX:XXX:XXX

Example lbrsl display status 10001

help

This command displays the syntax for the Dynamic*Access* server features commands.

Syntax lbrsl help

link timeout

When a group is being created, the software waits the number of seconds specified by this command for the link/topology check to finish and then displays timeout information.

Syntax lbrsl link timeout *seconds*

where:

seconds is the time in seconds.

Example lbrsl link timeout 10

Default 5

probe interval

This command sets the probe packet interval. If no argument is specified or the specified argument is invalid, the current value is displayed. Otherwise, the new value is displayed.

Syntax lbrsl probe interval *seconds*

where seconds is the interval in seconds.

Example lbrsl set probe interval 1

Default 1 second

If the delay is longer than 1 second, NIC or link failures are not recognized as quickly.

receive timeout

This command sets the receive timeout individually for each group and displays a message for each loaded frame type.

Syntax lbrsl receive timeout *pri_slot seconds*

where:

pri_slot is the PCI slot number of the primary NIC.

seconds is the time in seconds

Example lbrsl receive timeout 10001 1

Default 1 second

retry count

This command sets the number of retries that the software attempts when a probe packet fails to appear at the receive end. After the retries, the software puts the board in Wait mode. If no argument is specified or the specified argument is invalid, the current value is displayed. Otherwise, the new value is displayed.

Syntax lbrsl retry count *number_of_retries*

where:

number_of_retries is any positive integer

Example lbrsl retry count 2

Default 5

send timeout

This command sets the timeout value, in seconds, that the software waits before retransmitting a probe packet when a send request to the link support layer (LSL) is not acknowledged. A message is displayed for each loaded frame type.

Syntax lbrsl send timeout *pri_slot seconds*
where:
pri_slot is the PCI slot number of the primary NIC.
seconds is the time in seconds.
Example lbrsl send timeout 1001 10
Default 10

ungroup

This command deletes a group. The LAN driver for the group must not be loaded. The following message appears for all frame types that the NIC supports:

```
Cleaning up resources for group associated with Primary
Slot #xxxx.
```

Syntax lbrsl ungroup *pri_slot*
where:
pri_slot is the PCI slot number of the primary NIC.
Example lbrsl ungroup 10001
Default None

wait timeout

This command sets the timeout value, in seconds, that the software waits before marking a NIC that is in wait mode as failed (see retry count). If no argument is specified or if the specified argument is invalid, the current value is displayed. Otherwise, the new value is displayed.

Syntax lbrsl wait timeout *seconds*
where:
seconds is any positive integer.
Example lbrsl wait timeout 2
Default 1

Troubleshooting a Group Configuration

Use the troubleshooting tips below to solve problems that may occur in a group configuration.



To access a database of technical information that can help you diagnose and solve NIC installation, configuration, and upgrade problems, go to:

http://knowledgebase.3com.com

Table 4 Troubleshooting Groups In NetWare

Symptom	Tip
More than two non-3Com server NICs have been detected in one or more groups on this server.	You can use only two NICs that are not 3Com server NICs in one 3Com load balancing/RSL group per server. Check the groups and remove all but two of the non-3Com server NICs from the groups.

5 CONFIGURING THE NIC

Configuration Settings

The table below lists the configuration settings for the NIC.

Before you change the NIC configuration settings, contact the system administrator.

Option	Description	Settings (Defaults in Bold)
Network Driver Optimization	Specifies how to optimize the network driver for your network by allowing trade-offs between network performance and CPU utilization. ■ *Normal* balances CPU utilization and network performance. ■ *Minimized CPU Utilization* saves CPU resources for other tasks. ■ *Maximized Network Performance* is appropriate if no other applications require extra CPU resources.	■ **Normal** ■ Minimized CPU Utilization ■ Maximized Network Performance
Duplex	Determines if the NIC transmits data across the network in both directions simultaneously (full-duplex) or in one direction at a time (half-duplex). ■ *Auto Select* allows the NIC to connect automatically at the duplex mode of the connected hub or switch. When you select this setting, the Media Type is set automatically to *Auto Select*. ■ *Full-Duplex* sets the NIC to operate in full-duplex mode. To use this setting, the switch that you are connected to must support full-duplex. You must also set the NIC *Media Type* setting manually. ■ *Half-Duplex* sets the NIC to operate in half-duplex mode. You must also set the NIC *Media Type* setting.	■ **Auto Select** ■ Full-Duplex ■ Half-Duplex
Boot PROM	Enables or disables the NIC boot ROM.	■ Enabled ■ **Disabled**
Media Type	Determines the type of media your network is using. ■ *Auto Select* allows the NIC to select the Media Type for you automatically. ■ If you set the NIC *Duplex* setting to *Auto Select*, the Media Type is set automatically to *Auto Select*. ■ If you set the NIC *Duplex* setting manually, you must set the Media Type setting manually.	■ **Auto Select** ■ 10BASE-T (10Mb/s) ■ 100BASE-TX (100Mb/s)

Configuration Methods

The NIC can be configured using any of the methods listed in the table below.

Method	Description	Requirements
3Com NIC Diagnostics program for Windows	Configure the NIC locally using the 3Com NIC Diagnostics program for Windows: **1** Make sure that the 3Com NIC diagnostics program is installed. **2** Open the Windows *Start* menu. **3** Select *Programs*, and then *3Com NIC Utilities*. **4** Click *3Com NIC Doctor*.	Windows NT 4.0 or Windows 2000
DOS Configuration and Diagnostics Program	Configure the NIC locally using the DOS Configuration and Diagnostics Program: **1** Reboot the computer using a DOS-bootable diskette. **2** Insert the *3Com EtherLink Server CD in the CD-ROM drive.* **3** Enter at the DOS prompt: **`d:\3c90xcfg.exe`** If you are running Japanese DOS, you must switch to U.S.-mode DOS before running this program.	DOS
DMI 2.0 or 2.0s	Configure the NIC remotely using the 3Com DMI Agent software. See Installing the 3Com DMI Agent on page 59 for more information.	3Com DMI Agent and a DMI-compatible browser or a network management application that supports DMI 2.0 or 2.0s
Windows 2000 Advanced tab	Configure the NIC locally as described in Changing Windows 2000 Property Settings on page 25.	Windows 2000

Configuring the NIC in Windows

Before you configure the NIC, make sure that:

- The NIC is installed in the computer and is connected to the network.
- The network driver is installed.
- The 3Com NIC Diagnostics program is installed.

To change the NIC general configuration settings, such as network driver optimization, duplex mode, and media type:

1. Open the Windows *Start* menu.
2. Select *Programs*, and then *3Com NIC Utilities.*
3. Click *3Com NIC Doctor.*

   The 3Com NIC Diagnostics General screen appears. Click Help to obtain general information about the function of a screen. To obtain specific information about any topic on a screen, click the question mark (?) in the upper right corner of the screen, move it over a topic, and click once.
4. If your computer has more than one NIC installed, open the Network Interface Card (NIC) list box and select the NIC to be configured.

5 Click the Configuration tab.

The Configuration screen appears.

6 Under Network Parameter, select the setting to be changed.

For a description of each setting, click the question mark (?) in the upper right corner of the screen, move it over a setting, and click once.

7 Open the Set Value list box and select a new value from the list of available options.

Repeat the process to change any other configuration setting.

To undo changes and return the settings to their previous values, click *Undo Changes*.

To return the settings to the factory default settings, click *Set Factory Defaults*.

8 Click *OK* to save the changes and exit the program.

Configuring the Managed PC Boot Agent (MBA)

This section explains how to configure the Managed PC Boot Agent (MBA) boot ROM (through Port A on the dual port NIC) to boot from the network. For details on using, configuring, and troubleshooting the MBA boot ROM, see the *Managed PC Boot Agent User Guide,* located with the MBA software on the 3Com EtherLink Server CD.

The default NIC boot ROM setting is *Disabled*. This setting must be enabled to boot from the network.

To enable or disable the NIC boot ROM setting:

1 Make sure that the NIC is installed and is connected to the network and that the NIC driver is installed.

2 Open the Windows *Start* menu.

3 Select *Programs*, and then *3Com NIC Utilities.*

4 Click *3Com NIC Doctor.*

The 3Com NIC Diagnostics General screen appears.

5 Click the Configuration tab.

The Configuration screen appears.

6 Under Network Parameter, select *Boot PROM*.

7 Open the Set Value list box and select *Enabled* to enable the boot ROM or *Disabled* to disable the boot ROM.

8 Click *OK* to save the setting and exit the program.

Booting From the Network

The boot process for the MBA boot ROM varies depending on the type of computer you have (BBS BIOS-compatible or non-BBS BIOS-compatible).

If the computer was purchased recently, it may be BBS (BIOS Boot Specification) BIOS-compatible. The BBS determines how the system BIOS identifies boot devices in a computer (such as a CD-ROM drive, a hard drive, or a floppy drive), allows the user to select the boot order of these devices, and then attempts to boot from each device in the specified order.

Refer to your computer documentation if you do not know which type of computer you have.

Follow the appropriate instructions to enable a BBS BIOS-compatible computer to boot from the network using the MBA boot ROM:

BBS BIOS-Compatible Computers

1. Make sure that the NIC boot ROM setting is *Enabled.* See Configuring the Managed PC Boot Agent (MBA) on page 45.
2. Set the MBA manually as the first boot device in the computer BIOS. Refer to the computer documentation for instructions on accessing and configuring the BIOS.
3. Reboot the computer. The MBA attempts to boot from the network using the default boot method PXE.
4. To change the default method or any other MBA configurations, press Ctrl+Alt+B when the following message appears:

   ```
   Initializing MBA. Press Ctrl+Alt+B to configure...
   ```

   If the network boot fails, the following message appears:

   ```
   Network boot aborted, press any key to continue
   ```

   The BIOS continues to the next device in the boot order (for example, the local hard drive).

   To cancel the network boot, press Esc anytime during the network boot process.

Non-BBS BIOS-Compatible Computers

1. Make sure that the NIC boot ROM setting is *Enabled.* See Configuring the Managed PC Boot Agent (MBA) on page 45.
2. Change the MBA default boot setting from *Local* to *Network*.

   To change the default boot setting or any other MBA configurations, use the MBACFG utility located on the MBA utility diskette or press Ctrl+Alt+B when the following message appears:

   ```
   Initializing MBA. Press Ctrl+Alt+B to configure...
   ```

For more information on using, configuring, and troubleshooting the MBA boot ROM, see the *Managed PC Boot Agent User Guide*, located with the MBA software on the 3Com EtherLink Server CD.

Disabling the 3Com Logo

To disable the 3Com logo that appears during startup:

1. Make sure that the NIC, the network driver, and the 3Com NIC Diagnostics program are installed.
2. Open the Windows *Start* menu.
3. Select *Programs*, and then *3Com NIC Utilities.*
4. Click *3Com NIC Doctor.*

   The 3Com NIC Diagnostics General screen appears.
5. On the General screen, clear the *Show Bitmap on Startup* check box.
6. Exit the 3Com NIC Diagnostics program.

6 TROUBLESHOOTING THE NIC

To access a database of technical information that can help you diagnose and solve NIC installation, configuration, and upgrade problems, go to:

http://knowledgebase.3com.com

Interpreting the LEDs

Diagnostic light-emitting diodes (LEDs) are located below the cable connector(s) on each NIC. The LEDs operate as follows:

LED	State	Meaning
10 LNK (link)	On	If drivers are installed, the 10BASE-T connection is active.
		If drivers are not installed, the NIC is receiving power.
	Off	Something is preventing the connection between the NIC and the hub or switch.
	Blinking	The cable polarity is reversed. Try a different network cable or contact the system administrator.
100 LNK (link)	On	If drivers are installed, the 100BASE-TX connection is active.
		If drivers are not installed, the NIC is receiving power.
	Off	Something is preventing the connection between the NIC and the hub or switch.
	Blinking	The cable polarity is reversed. Try a different network cable or contact the system administrator.
10/100 LNK (model 3C982-TXM only)	On	If drivers are installed, the 10/100BASE-T connection is active.
		If drivers are not installed, the NIC is receiving power.
	Off	Something is preventing the connection between the NIC and the hub or switch.
	Blinking	The cable polarity is reversed. Try a different network cable or contact the system administrator.
ACT (activity)	Blinking	Network traffic is present.
	Steady	Heavy network traffic is present.
	Off	No network traffic is present.

If a LNK LED indicates a problem, check the following:

- Ensure that the network hub or switch and the cable connecting to the NIC comply with the specifications appropriate for the network connection.
- Ensure that the hub or switch is powered on.

Viewing the NIC LEDs in the Diagnostics Program

To view the LEDs in the 3Com NIC Diagnostics program:

1. Make sure that the NIC, the network driver, and the 3Com NIC Diagnostics program are installed.
2. Open the Windows *Start* menu.
3. Select *Programs*, and then *3Com NIC Utilities.*
4. Click *3Com NIC Doctor.*

   The 3Com NIC Diagnostics General screen appears and displays following LEDs:

   Link—lights if there is a valid connection between the NIC and the network.

   Transmit—lights if the NIC is transmitting information.

   Receive—lights if the NIC is receiving information.

Accessing the 3Com Knowledgebase

To access a database of technical information that can help you diagnose and solve NIC installation, configuration, and upgrade problems, go to:

`http://knowledgebase.3com.com`

Accessing the 3Com NIC Help System

To access the 3Com NIC Help system:

1. Make sure that the NIC, its driver, and the 3Com NIC Diagnostics program are installed.
2. Open the Windows *Start* menu.
3. Select *Programs*, and then *3Com NIC Utilities*.
4. Select *3Com NIC Doctor Help*.

   The main Help screen appears.
5. Click *Help Topics* to display a list of Help topics or click *Find* to search for a Help topic.

Accessing Other Information

To access release notes and frequently asked questions about the NIC:

1. Make sure that the NIC, its driver, and the 3Com NIC Diagnostics program are installed.
2. Open the Windows *Start* menu.
3. Select *Programs*, and then *3Com NIC Utilities.*
4. Click *3Com NIC Doctor.*

   The 3Com NIC Diagnostics General screen appears.
5. Click the Support tab.

   The Support screen appears.

6 *Click Support Databases* to display customer support databases about the NIC in three categories:

Release notes—Display tips about installing and using the NIC.

Frequently asked questions—Display common questions asked by customers and answered by 3Com support experts.

Knowledgebase topics—Display NIC compatibility topics.

Troubleshooting the Network Connection

If you encounter problems using the NIC or connecting to the network, check the table below for troubleshooting tips.



WARNING: *Before inserting or removing the NIC from the computer, turn the computer power off and unplug the power cord.*

Tip	Description
Check the NIC installation	Make sure that the NIC is installed correctly in a PCI slot. Check for specific hardware problems, such as broken traces or loose or broken solder connections.
Check the network connection	Inspect all cables and connections. Make sure that the cable complies with the cable requirements described under Preparing the NIC and the Computer on page 8.
Check the computer BIOS	Make sure that you are running the latest BIOS for the computer. If the BIOS has not been upgraded in the previous 12 months, contact the computer manufacturer to obtain the current version of the BIOS software.
Run the NIC diagnostic tests	Run the NIC and Network Tests, as described in Running NIC Diagnostics in Windows on page 53. If the tests fail, replace the NIC with a known working NIC and run the tests again, using the same configuration settings as those used on the failed NIC. If the working NIC passes all tests, the original NIC is probably defective. For information on product repair, see Returning Products for Repair on page 66.
Check the 3Com support databases	■ See Accessing the 3Com Knowledgebase on page 48. ■ See Accessing the 3Com NIC Help System on page 48. ■ See Accessing Other Information on page 48.
Download the latest NIC driver	The 3Com Software Library is your internet source for software, drivers, and INF files for all 3Com products. Go to http://support.3com.com/software.

Troubleshooting Remote Wake-Up

If the computer does not boot in response to a Remote Wake-Up event, perform these troubleshooting steps:

1 Make sure that the computer meets the requirements listed in Remote Wake-Up (Single Port Models Only) on page 5.

2 Make sure that you are using the latest driver for the NIC.

This driver is shipped with the NIC on the 3Com EtherLink Server CD. It can also be downloaded from the 3Com Software Library. Go to **http://support.3com.com/software**.

3 Perform the Remote Wake-Up Test.

See Viewing Network Statistics on page 54 for instructions.

4 Check the computer BIOS.

- Boot the computer and enter the BIOS.

  If you do not know how to enter the BIOS, consult the computer documentation or contact the computer vendor.

- Locate the Wake-Up on LAN event setting.
- Verify that the setting is enabled.

5 Check the Remote Wake-Up cable connection.

If the computer complies with PCI 2.2, the Remote Wake-Up cable is not required. Remote Wake-Up is enabled automatically through the PCI bus.

- Turn off the power to the computer and remove the computer cover.
- Make sure that the Remote Wake-Up cable is plugged in to the RWU connector on the NIC and in to the appropriate connector on the computer motherboard. Unplug and reinsert the cable if necessary.
- Replace the Remote Wake-Up cable with a known functioning Remote Wake-Up cable and perform the Remote Wake-Up Test again.

6 If the previous steps have failed, install a known functioning Remote Wake-Up NIC in the computer.

If Remote Wake-Up works with the known functioning NIC installed, contact the computer vendor for a replacement NIC. If Remote Wake-Up does not work with this NIC installed, there may be a problem with the computer motherboard. Contact the computer manufacturer.

Removing the Network Driver

To remove the network driver from the computer, follow the steps for your operating system.



WARNING: *If the NIC is part of a group, you must first remove the NIC from the group before you remove the network driver. See Removing a NIC from a Group on page 24 for instructions.*

Windows NT

To remove the network driver:

1 Double-click the My Computer icon, then the Control Panel icon, and then the Network icon.

The Network screen appears.

2 Click the Adapters tab.

3 Highlight the name of the NIC in the Network Adapters box, and then click *Remove*.

4 Click *Yes* to confirm the removal.

5 Click *Close* to close the Network screen.

You are prompted to restart the computer.

If you are physically removing the NIC from the computer, click *No*. Do not restart the computer until you remove the NIC from the computer.

If you are reinstalling the NIC software, click *Yes* to restart the computer.

Windows 2000

The Windows 2000 system does not allow you to uninstall the network driver from the Network and Dial-up Connections window. To remove the network driver:

1. Right-click the My Computer icon, then select *Properties* from the menu.
2. Select the Hardware tab, then click *Device Manager*.
3. Double-click *Network Adapters*.
4. Right-click on the name of a NIC and select *Uninstall* from the menu.
5. Click *OK* to confirm device removal.
6. Exit the Device Manager.

The Windows 2000 system does not allow you to uninstall the Dynamic*Access technology miniport using the Device Manager. To remove* DynamicAccess *technology server features in Windows 2000, see* *Removing Server Features on page 51*.

NetWare

To remove the network driver:

1. Enter this command at the prompt:

   NetWare 4.2: **`load install`**

   NetWare 5.x: **`load nwconfig`**
2. In the Installation Options screen, select *Driver options*.
3. In the Driver Options screen, select *Configure network drivers.*

   The Selected Network Drivers screen appears, listing all previously saved drivers in the system.
4. From the list of drivers, select *3C980*.
5. In the Additional Driver Actions screen, select *Deselect a selected driver* and press Enter.
6. Follow the prompts to remove the driver.

Removing Server Features

Follow the steps for your operating system.

WARNING: *If the NIC is part of a group, you must first remove the NIC from the group before you remove server features. See Removing a NIC from a Group on page 24 for instructions.*

Windows NT and Windows 2000

To remove Dynamic*Access* technology server features:

1. From the *Start* menu, select *Settings/Control Panel*.
2. Double-click the Add/Remove Programs icon.
3. Click the *Install/Uninstall* tab.
4. In the Install/Uninstall tab, select **Dynamic***Access Server Software*.
5. Click *Add/Remove*.
6. Follow the prompts to remove the software and reboot the server.

NetWare

To remove Dynamic*Access* technology server features:

1. Enter this command at the prompt:

   NetWare 4.2: **`load install`**

   NetWare 5.x: **`load nwconfig`**

2. In the Installation Options screen, select *Product options*.
3. In the Other Installation Actions screen, select *View/Configure/Remove installed products*.

   The Currently Installed Products screen appears, listing software products that are installed in the system.
4. From the list of products, select *3Com DynamicAccess Server Features* and press Del.
5. Select *Yes* to remove the software.

Removing 3Com NIC Diagnostics

Follow the steps for your operating system.

Windows NT and Windows 2000

To remove 3Com NIC Diagnostics:

1. From the *Start* menu, select *Settings/Control Panel*.
2. Double-click the Add/Remove Programs icon.
3. Click the *Install/Uninstall* tab.
4. In the Install/Uninstall tab, select *3Com NIC Diagnostics*.
5. Click *Add/Remove*.
6. Follow the prompts to remove the software and reboot the server.

7 RUNNING NIC DIAGNOSTICS IN WINDOWS

Overview

The 3Com NIC Diagnostics program for Windows contains tests that can check the status of the following items:

- NIC
- Network
- Network statistics



To run NIC diagnostics tests on a computer running DOS or NetWare, use the 3Com Configuration and Diagnostics program for DOS (3C90XCFG.EXE) located on the 3Com EtherLink Server CD.

To start the diagnostics program:

1. Make sure that the NIC, the network driver, and the 3Com NIC Diagnostics program are installed.
2. Open the Windows *Start* menu.
3. Select *Programs*, and then *3Com NIC Utilities.*
4. Click *3Com NIC Doctor.*

   The 3Com NIC Diagnostics General screen appears.

   Click *Help* to obtain general information about the function of a screen. To obtain specific information about any topic on a screen, click the question mark (?) in the upper right corner of the screen, move it over a topic, and click once.
5. Click the Diagnostics tab.

   The Diagnostics screen appears.

Running the NIC Test

Run the NIC Test to check the physical components, connectors, and circuitry on the NIC.

1. On the Diagnostics screen, click *Run NIC Test*.

   The NIC Test screen appears.
2. Click *Perform NIC Test*.

   While the test is running, a progress bar indicates test progress.

   If the test passes, the NIC is functioning correctly.

   If the test fails, a message indicates the error type. Click *Help* in the error message screen to obtain more information.
3. Click *Close*.

Running the Network Test

Run the Network Test to check the NIC connectivity to the network.

1. On the Diagnostics screen, click *Run Network Test*.

   The Network Connectivity Test screen appears.

2. Click *Start*.

   If the test passes, the NIC connection to the network is functioning correctly.

   If the test fails:

   Make sure that the NIC is properly connected to the network cable.

   Make sure that the hub or switch to which the NIC is connected is powered on.

   Make sure that the cable complies with the proper length and rating specifications for the network.

3. Click *Close*.

Viewing Network Statistics

To view statistical information about the network:

1. Make sure that the NIC, the network driver, and the 3Com NIC Diagnostics program are installed.
2. Open the Windows *Start* menu.
3. Select *Programs*, and then *3Com NIC Utilities.*
4. Click *3Com NIC Doctor.*

   The 3Com NIC Diagnostics General screen appears.

5. Click the Statistics tab.

   The Statistics screen appears.

   The information is updated by the NIC driver every 5 seconds.

   For a description of each statistic, click the question mark (?) in the upper right corner of the screen, drag it over a statistic and click once. A pop-up box appears, displaying information about the statistic.

6. Click *OK* to exit the diagnostics program. To go to another diagnostics screen, click the associated tab.

Using the 3Com Icon in the Windows System Tray

The 3Com icon, which can be enabled to appear in the Windows system tray, allows you to start the 3Com NIC Diagnostics program. It also allows you to view the link speed of the NIC and number of frames sent and received.

Enabling the Icon

To show the 3Com icon in the Windows system tray:

1. Make sure that the NIC, the network driver, and the 3Com NIC Diagnostics program are installed.
2. Open the Windows *Start* menu.
3. Select *Programs*, and then *3Com NIC Utilities.*

4 Click *3Com NIC Doctor.*

The 3Com NIC Diagnostics General screen appears.

5 On the General screen, select the check box next to *Show Icon in System Tray*.

6 Close the 3Com NIC Diagnostic program.

The NIC icon appears in the Windows system tray.

When you double-click the icon, the 3Com NIC Diagnostics program starts.

Displaying Network Statistics

When you drag the mouse pointer over the icon (but do not double-click the icon) a network statistics box appears, displaying the following information.

Frames Sent and Received—A count of the number of frames (packets) sent and received through the NIC since the last time statistics were reset.

Link Speed—The speed (10 Mbps or 100 Mbps) at which the NIC is connected to the network.

A

INSTALLING A 3COM NIC WHILE INSTALLING THE NOS

Follow these instructions to install 3Com software while you are installing the network operating system. (This procedure is often called "performing a fresh installation.")

Windows Fresh Installation

For installation requirements, see Installation Requirements on page 7.

To display the Help system during the driver installation, click *Help* on any 3Com window.

Windows NT

For instructions, see the Readme file in the WINNT directory on the 3Com EtherLink Server CD.

Windows 2000

During the Windows 2000 installation, the Hardware Wizard detects installed NICs and installs drivers it finds for them from the Windows 2000 CD. If you want to install the latest software from the 3Com EtherLink Server CD after you finish installing Windows 2000, restart the server and follow the instructions for Windows 2000 in Updating Software in Windows on page 16.

NetWare Fresh Installation

These instructions apply to NetWare versions 4.2 and 5.x.

Requirements

See Installation Requirements on page 7 and Software Installation Requirements on page 27.

Installation Instructions

These instructions are for installing from the 3Com EtherLink Server NIC CD. If you download 3Com software from the Web and make installation diskettes to use for the installation, the steps are slightly different (you do not need to remove and replace the NetWare CD).

1. Install the NIC hardware and connect it to the network.
2. Start the installation and proceed as usual until you reach the Device Types screen.
3. In the Device Types screen:

   Locate the Network Boards field, and notice that there are no NICs listed. From the Options menu, select *Modify*.
4. In the next screen, select Network Boards and press Enter.
5. Press Ins (Add a Board).
6. Press Ins (Add Unlisted Driver).
7. Remove the NetWare CD from the CD-ROM drive.

8 Insert the 3Com EtherLink Server CD in the CD-ROM drive.

9 Press F3.

10 Enter the location of the driver on the 3Com CD. For example:

```
D:\nwserver
```

11 In the Driver Summary screen, select 3C980.LAN and press Enter.

Edit parameters as necessary.

12 From the Additional Driver Options menu, select *Return to Driver Summary*.

13 Remove the 3Com CD from the CD-ROM drive.

14 Insert the NetWare CD in the CD-ROM drive.

15 From the Options menu, select *Continue*.

The installation continues.

In NetWare 5.x, the Configure Server Properties windows appear. Locate the Network Boards list in the Protocols window. The installed NICs are listed in this window. Select each installed NIC and configure its protocols. Proceed with the installation, and reboot when you are prompted to do so.

16 When the installation is finished, edit the STARTUP.NCF file.

Specify receive buffers for each installed NIC. (For more details on receive buffers, see Software Installation Requirements on page 27.)

B

INSTALLING THE 3COM DMI AGENT

Overview

The 3Com DMI Agent allows any DMI-compatible browser or network management application that supports DMI 2.0 to remotely manage and configure advanced features of an EtherLink PCI NIC. You can obtain basic NIC information, including:

- Node address
- MAC address
- Driver version

Additionally, depending on the features of your NIC, the 3Com DMI Agent allows you to view and configure advanced NIC features, including:

- Managed PC Boot Agent (MBA) software
- Remote Wake-Up events
- Workgroup keep-alive packet
- Remote system alerts (including heartbeat)

Each computer that contains an EtherLink NIC and the 3Com DMI Agent generates a Management Information Format (MIF) file that contains information about the computer and the NIC. DMI applications use the information from the MIF to manage the computer and the NIC.

The content of the MIF is based on the capabilities of the NIC driver found in the computer. For example, if a NIC with an MBA boot ROM is found, all groups related to the boot ROM are included in the MIF for that particular NIC. This ensures that the network management application does not receive irrelevant information for the NIC.

For detailed information on the 3Com DMI Agent, including a description of each MIF that is supported by the 3Com DMI Agent, see the 3Com DMI Agent User Guide included with the 3Com DMI Agent software on the 3Com EtherLink Server CD.

For more information on DMI, go to:

http://www.3com.com/managedpc

System Requirements

This section lists the computer and network management requirements for installing and using the 3Com DMI Agent.

Computer Requirements	■ DMI Service Provider 2.0 or greater (such as Smart Technologies Service Provider 2.0) ■ NDIS 3, 4, or 5 driver ■ Windows NT 4.0 with the latest Service Pack, or Windows 2000
Network Management Requirements	Your network management station requires a DMI-compatible browser or a network management application that supports DMI 2.0, such as: ■ Hewlett Packard TopTools ■ Tivoli Management Suite ■ Dell OpenManage ■ Compaq Insight Manager Management Station ■ Intel LANDesk Client Manager

Installation Instructions

This section describes how to install the 3Com DMI Agent on a computer running Windows NT 4.0.

Before installing the DMI Agent, log on to the computer with an account that has system administration privileges.

To install the 3Com DMI Agent:

1. Make sure that the computer meets the requirements listed earlier in System Requirements.
2. Make sure that the NIC is installed in the computer and is connected to the network.
3. Insert the *3Com EtherLink Server CD* in the CD-ROM drive.
4. From the Welcome screen, click *NIC Software*.
5. Click *Install 3COM DMI Agent now*.
6. Follow the prompts to install the software.
7. Restart the computer when prompted.

   To verify successful installation, use a DMI-compatible browser or a network management application that supports DMI 2.0 or 2.0s to verify that the 3Com NIC is present. See the *3Com DMI Agent User Guide or contact your system administrator* for instructions.

C

SPECIFICATIONS

Standards Conformance

IEEE 802.3 10BASE-T
IEEE 802.3u 100BASE-TX auto-negotiation
N-Way 10/100 auto-negotiation
IEEE 802.3x full duplex auto-negotiation and flow control
IEEE 802.1p/Q
IEEE 802.1Q VLAN Tagging
Microsoft PC97
Microsoft PC98
Microsoft PC99
Microsoft Server Design Guide 2.0
PCI 2.2
DMI 2.x
ACPI 1.0
Wired for Management 1.1a, 2.0
Pre-OS boot protocol support (PXE, BootP/DHCP, NCP, RPL)

Hardware

Bus interface	*PCI Local Bus Specification, Revision 2.2*
	32-bit or 64-bit bus master
PCI master	Supports bus master scatter-gather DMAs, MAC-level multicast filtering
Dimensions	3C980X
	Height: 7.62 cm (3.00 in)
	Length: 12.07 cm (4.75 in)
	3C982-TXM
	Height: 8.51 cm (3.35 in)
	Length: 16.76 cm (6.6 in)
Power requirement	+5 V ±5% @ 650 mA maximum
LEDs	Indicate link polarity, integrity, and activity for 10BASE-T and 100BASE-TX operations

Network Interface

10 Mbps Ethernet 10BASE-T	Ethernet IEEE 802.3 industry standard for a 10 Mbps baseband CSMA/CD local area network
100 Mbps Ethernet 100BASE-TX	Ethernet IEEE 802.3u industry standard for a 100 Mbps baseband CSMA/CD local area network

Environment

Operating temperature	32˚ to 158˚F (0˚ to 70˚C)
Storage temperature	–22˚ to 194˚F (–30˚ to 90˚C)
Operating humidity	10 to 90% noncondensing
Storage humidity	10 to 90% noncondensing
Altitude	–984 ft to 9,840 ft (–300 to 3,000 m)

Connector and Cabling Requirements

Connector	RJ-45
10BASE-T cable	Category 3, 4, or 5 UTP
100BASE-TX cable.	Category 5 UTP
Compliance	Cable, quality, distance, and connector must comply with *EIA/TIA 568 Commercial Building Wiring Standard* and the Technical Services Bulletin TSB38 standards
Maximum UTP cable distance	100 meters (330 feet)

D

TECHNICAL SUPPORT

3Com provides easy access to technical support information through a variety of services. This appendix describes these services.

Information contained in this appendix is correct at time of publication. For the very latest, 3Com recommends that you access the 3Com Corporation Web site.

Online Technical Services

3Com offers worldwide product support 24 hours a day, 7 days a week, through the following online systems:

- World Wide Web site
- 3Com FTP site

World Wide Web Site

Access the latest networking information on the 3Com Corporation Web site by entering the URL into your Internet browser:

`http://www.3com.com/`

This service provides access to online support information such as technical documentation and software library, as well as support options ranging from technical education to maintenance and professional services.

3Com FTP Site

Download drivers, patches, software, and MIBs across the Internet from the 3Com public FTP site. This service is available 24 hours a day, 7 days a week.

To connect to the 3Com FTP site, enter the following information into your FTP client:

- Hostname: **`ftp.3com.com`** (or **`192.156.136.12`**)
- Username: **`anonymous`**
- Password: **`<your Internet e-mail address>`**



A user name and password are not needed with Web browser software such as Netscape Navigator and Internet Explorer.

Support from Your Network Supplier

If additional assistance is required, contact your network supplier. Many suppliers are authorized 3Com service partners who are qualified to provide a variety of services, including network planning, installation, hardware maintenance, application training, and support services.

When you contact your network supplier for assistance, have the following information ready:

- Product model name, part number, and serial number
- A list of system hardware and software, including revision levels
- Diagnostic error messages
- Details about recent configuration changes, if applicable

If you are unable to contact your network supplier, see the following section on how to contact 3Com.

Support from 3Com

If you are unable to obtain assistance from the 3Com online technical resources or from your network supplier, 3Com offers technical telephone support services. To find out more about your support options, please call the 3Com technical telephone support phone number at the location nearest you.

When you contact 3Com for assistance, have the following information ready:

- Product model name, part number, and serial number
- A list of system hardware and software, including revision levels
- Diagnostic error messages
- Details about recent configuration changes, if applicable

Below is a list of worldwide technical telephone support numbers:

Country	Telephone Number
Asia Pacific Rim	
Australia	1 800 678 515
Hong Kong	800 933 486
India	61 2 9937 5085
Indonesia	001 800 61 009
Japan	03 5783 1270
Malaysia	1800 801 777
New Zealand	0800 446 398
Pakistan	61 2 9937 5085
Philippines	1235 61 266 2602
P.R. of China	10800 61 00137 or 021 6350 1590
Singapore	800 6161 463
S. Korea	
From anywhere in S. Korea:	82 2 3455 6455
From Seoul:	00798 611 2230
Taiwan, R.O.C.	0080 611 261
Thailand	001 800 611 2000
Europe	
From anywhere in Europe, call:	+31 (0)30 6029900 phone +31 (0)30 6029999 fax

Country	Telephone Number
From the following European countries, you may use the toll-free numbers:	
Austria	06 607468
Belgium	0800 71429
Denmark	800 17309
Finland	0800 113153
France	0800 917959
Germany	0800 1821 502
Hungary	00800 12813
Ireland	1 800 553117
Israel	177 3103794
Italy	1678 79489
Luxembourg	34 2080 8318
Middle East	971 4319 533
Netherlands	0800 0227788
Norway	800 11376
Poland	0800 3111206
Portugal	0800 83 1416
South Africa	971 4319 533
Spain	900 983125
Sweden	020 795482
Switzerland	0800 55 3072
U.K.	0800 966197

Latin America	
Argentina	0810 222 3COM
Brazil	0800 13 3266
Chile	AT&T +800 778 5573
Colombia	AT&T +800 778 5573
Mexico	52 5 133 3380
Peru	AT&T +800 778 5573
Puerto Rico	AT&T +800 778 5573
Venezuela	AT&T +800 778 5573
North America	1-800-527-8677

Returning Products for Repair

Before you send a product directly to 3Com for repair, you must first obtain a Return Materials Authorization (RMA) number. Products sent to 3Com without RMA numbers will be returned to the sender unopened, at the sender's expense.

To obtain an RMA number, call or fax:

Country	Telephone Number	Fax Number
Asia, Pacific Rim	65 543 6500	65 543 6348
Europe, South Africa, and Middle East	+ 44 1442 435860	+ 44 1442 435718
From the following European countries, you may call the toll-free numbers; select option 2 and then option 2:		
Austria	06 607468	
Belgium	0800 71429	
Denmark	800 17309	
Finland	0800 113153	
France	0800 917959	
Germany	0800 1821502	
Hungary	00800 12813	
Ireland	1800553117	
Israel	177 3103794	
Italy	1678 79489	
Netherlands	0800 0227788	
Norway	800 11376	
Poland	00800 3111206	
Portugal	0800 831416	
South Africa	971 4319533	
Spain	900 983125	
Sweden	020 795482	
Switzerland	0800 55 3072	
U.K.	0800 966197	
Latin America	1 408 326 2927	1 408 326 3355
U.S.A. and Canada	1-800-527-8677	1 408 326 7120

INDEX

Numbers

10 LNK LED
  troubleshooting with 47
10/100 LNK LED
  troubleshooting with 47
100 LNK LED
  troubleshooting with 47
100BASE-TX
  cable requirements 8
  link LED 47
10BASE-T
  cable requirements 8
  link LED 47
3Com DMI Agent
  computer requirements 60
  installing 60
  network management
    requirements 60
  overview 59
3Com icon, in Windows system tray
  removing 54
  showing 54
3Com logo, disabling 46
3Com NIC Diagnostics program
  starting 44, 53, 54
3Com NIC help system 48
3Com URL 63
802.1p Support property 18

A

accessing Help 48
ACT (activity) LED
  troubleshooting with 47
activity on the network, verifying 54, 55
adding NICs to a group
  NetWare 35, 36
  Windows 21
administration with Dynamic*Access*
  software 23
Alert Type 15
alerts, remote system
  overview 6
  requirements 6
altitude specifications 62
AUTOEXEC.NCF file, samples 31, 36, 37

B

bidirectional load balancing 3, 17, 35
  defined 2
  groups 2
BIOS 8
boot ROM, MBA
  booting from network 45
  default setting 43
  enabling or disabling 45
  overview 5
bus interface specifications 61

C

cabling
  requirements 62
  specifications, RJ-45 port 8
  troubleshooting 49
  unshielded twisted-pair (UTP) 8
carrier sense lost, viewing 54
Check Level 32
collisions, viewing 54
commands for Netware server features
  display status 38
  group 38
  help 38
  link timeout 39
  probe interval 39
  receive timeout 39
  retry count 39
  send timeout 40
  ungroup 40
  wait tmo 40
computer requirements 7
Configuration and Diagnostics Program,
  DOS 44, 53
configuration guidelines for VLANs 18
configuration parameters
  NetWare
    changing 32
    Check Level 32
    Log Message Level 32
    Node Address 32
    Receive Checksum 32
    Sampling Window Size 32
    SHD Configuration 32
    Slot Number 32
    Transmit Checksum 32
    Transmit/Receive Error
      Threshold 32
  Windows
    Alert Type 15
    Error Tolerance 15
    Sampling Ratio 15
    Sampling Window 15
    Self Check Level 15
    SHD messages 16
configuring
  Managed PC Boot Agent (MBA) 45
  NIC 44
  VLANs 18, 22
connector requirements 62
CRC errors, viewing 54
creating a group
  NetWare 30, 36
  Windows 20
creating a VLAN, Windows 22

D

dedicated IP address 21, 22
deleting or editing a VLAN,
  Windows 24
Desktop Management Interface (DMI)
  computer requirements 60
  installation 60
  network management
    requirements 60
  overview 6, 59
diagnostics
  DOS 44, 53
  programs
    3Com NIC Doctor 44, 53
    DOS Configuration and
      Diagnostics Program 44
  tests, running 53
disabling load balancing for a group,
  Windows 23
diskettes
  creating 12
  obtaining 12
display status command 38
displaying
  group properties, Windows 24
  NIC properties, Windows 24
DMI 44
DMI (Desktop Management Interface)
  computer requirements 60
  installation 60
  network management
    requirements 60
  overview 6, 59
DOS
  diagnostics 44, 53
driver
  installation
    NetWare 28
    Windows 2000 14
    Windows NT 13
  removing 50
    NetWare 51
    Windows 2000 51
    Windows NT 50
driver installation requirements
  NetWare 27, 57
  Windows 13, 57

duplex mode
configuring 44
default setting 43
Dynamic*Access* LAN agent
traffic prioritization 2
Dynamic*Access* server features
NetWare
commands 37
configuration guidelines 34
overview 2
removing 51, 52
Windows
adding NICs to a group 21
changing the primary NIC 24
creating a group 20
creating a VLAN 22
deleting or editing a VLAN 24
removing a NIC from a group 24
window, defined 19
Windows 2000
accessing the program 19
Windows NT
starting the program 19
Dynamic*Access* Software Setup window 23

E

editing
NIC properties, Windows 24
or deleting a VLAN, Windows 24
efficient multicast control, configuring 23
EIA/TIA 568 standards 62
Error Tolerance 15
excessive collisions, viewing 54

F

failover 3
about 3
from gigabit to EtherLink 10/100 PCI NIC 18, 24
foreign NIC
defined 5
in NetWare groups 35
in Windows groups 18
frame alignment errors, viewing 54
frames, sent and received, viewing 55
frequently asked questions 49
fresh install
NetWare 57
Windows 2000 57
Windows NT 57
full-duplex 43

G

group command 38
groups 2
adding NICs to
NetWare 35
Windows 21
adding, NetWare 36
configuring during NetWare driver installation 30
displaying properties of, Windows 24
removing NICs from, Windows 24
Windows
creating 20
disabling load balancing for 23

H

half-duplex 43
hardware
installation 9
specifications 61
heartbeat packets (remote system alerts) 2, 6
help command, NetWare server features 38
Help system, accessing 13, 48
Host ID 21
hot plug NIC installation 5
humidity
operating 62
storage 62

I

icon, 3Com 54
IEEE 802.1p Support property 18
installation
3Com DMI Agent 60
connecting to the network 11
diskettes
creating 12
obtaining 12
driver
NetWare 28
Windows 2000 14, 17
Windows NT 13
during NetWare NOS installation 57
during Windows 2000 NOS installation 57
during Windows NT NOS installation 57
fresh install
NetWare 57
Windows 2000 57
Windows NT 57
hardware 9
NetWare, verifying 31
overview 7
requirements, hardware and software 7, 11
server features
NetWare 30
verifying 16
Windows, verifying 16
IP address
changing 22
dedicated 21, 22

K

keep-alive packet, workgroup 6
Knowledgebase topics
accessing through diagnostics program 49
accessing through Web site 48

L

LAN connections, relating to miniport connections 25
late collisions, viewing 54
LEDs
description 47
troubleshooting 47
viewing in diagnostics program 48
Link LED, viewing 48
link speed, viewing 55
link timeout command 39
Load Balance/RSL window 19
load balancing
bidirectional 3, 17, 35
dedicated IP address 21, 22
disabling, Windows 23
groups
adding NICs to, Windows 21
adding, NetWare 36
configuring during NetWare driver installation 30
creating, Windows 20
maintaining, NetWare 34
maintaining, Windows 17
removing NICs from, Windows 24
transmit 3, 17
troubleshooting, NetWare 41
troubleshooting, Windows 25
Log Message Level 32
logo, 3Com, disabling 46

M

MAC address 9, 32, 33
location on NIC 27
maintaining server features
NetWare 34
Windows 17
Managed PC Boot Agent (MBA) software
configuring 45
network booting 45
overview 5
Management Information Format (MIF) 59
MBA boot ROM 2, 5
media type
configuring 44
default setting 43
memory requirements 7
NetWare packet receive buffer sizes 27
MIBs 63
Microsoft Task Offload support 18
MIF (Management Information Format) 59

miniport connections, relating to LAN connections 25
multicast control, configuring 23
multiple collisions, viewing 54
multiple NICs in NetWare 27

N

NetWare
adding a group 36
adding NICs to a group 35
configuration parameters 32
configuring server features 30
correlating slot numbers and physical NICs 27
driver
installation, NetWare 28
driver installation requirements 27, 57
Dynamic*Access* server feature commands 37
maintaining server features 34
packet receive buffer sizes 27
removing NIC software 51
server features installation 30
slots for multiple NICs 27
system requirements 27, 57
verifying driver installation and configuration 31
network
activity, verifying 54, 55
booting 45
connecting to 11
connection
testing 54
troubleshooting 49
statistics, viewing 54
test, running 54
network driver optimization
configuring 44
default setting 43
description 43
removing the driver 50
Network ID 21
network interface specifications 61
network supplier support 63
NIC
configuration parameters
NetWare installation program 32
diagnostic tests 53
features 2
foreign
defined 5
in NetWare groups 35
in Windows groups 18
groups 2
physical dimensions 61
power requirement 61
primary 2
properties
displaying, Windows 24
editing, Windows 24
secondary 2
software, removing 50
test, running 53
virtual 2
Node Address 32

O

offload support 18
online Help 48
online Knowledgebase 48
online technical services 63
operating humidity 62
operating temperature 62

P

packet receive buffers, NetWare 27
packets, viewing 54, 55
PCI master specifications 61
PCI slot, identifying 9
power requirement 61
primary NIC 2, 24
binding protocol, NetWare 30
changing, Windows 24
probe interval command 39
properties
group, displaying, Windows 24
NIC
displaying, Windows 24
editing, Windows 24
property settings, changing in Windows 2000 25

R

Receive Checksum 32
Receive LED, viewing 48
receive overruns, viewing 54
receive timeout command 39
received frames, viewing 55
release notes, accessing 49
remote system alerts (heartbeat packets) 2, 6
Remote Wake-Up
overview 5
requirements 5
troubleshooting 49
removing
NIC from a group, Windows 24
NIC software 50
server features
NetWare 52
Windows NT 51, 52
requirements
3Com DMI Agent 60
cabling 62
computer 7
connector 62
driver installation
NetWare 27, 57
Windows 13, 57
hardware and software 7, 11
memory 7
Remote Wake-Up 5
resilient server links (RSLs) 2
retry count command 39
returning products for repair 66
ROM, MBA boot 2, 5
RWU 5

S

safety precautions 7
Sampling Ratio 15
Sampling Window 15
Sampling Window Size 32
secondary NICs 2, 24
Self Check Level 15
self-healing drivers (SHDs) 2, 3
send timeout command 40
sent frames, viewing 55
server features 2
configuring
NetWare 17, 30, 34
Windows NT 17
installing
NetWare 30
maintaining
NetWare 34
Windows 17
removing 51, 52
SHD
Error messages 16
Inform messages 16
parameters
NetWare 32
Windows 15
Warning messages 16
single collisions, viewing 54
Slot Number 32
slots
for multiple NICs
NetWare 27
obtaining numbers, NetWare 27
software
removing 50
updating, Windows 16
spanning tree 18, 34
specifications
cabling, RJ-45 port 8
hardware 61
speed, link, viewing 55
SQE errors, viewing 54
standards conformance specifications 61
statistics, network, viewing 54
storage humidity 62
storage temperature 62
support databases, accessing 48
system requirements
NetWare 27, 57
Windows 13, 57

T

TCP/IP configuration
  NetWare 33
  Windows NT 14
technical support
  3Com URL 63
  network suppliers 63
  product repair 66
temperature
  operating 62
  storage 62
test
  Network 54
  NIC 53
timeout 39
traffic prioritization
  configuring 23
  overview 2
Transmit Checksum 32
transmit deferrals, viewing 54
Transmit LED, viewing 48
transmit load balancing 3, 17
transmit underruns, viewing 54
Transmit/Receive Error Threshold 32
troubleshooting
  cable 49
  group configuration 41
  LEDs 47
  load balancing, NetWare 41
  load balancing, Windows 25
  MBA boot ROM 45
  network connection 49
  Remote Wake-Up 49
  Windows 2000 property settings 25

U

ungroup command 40
uninstalling software
  Dynamic*Access* server features
    NetWare 52
    Windows 2000 52
    Windows NT 51, 52
uninstalling the NIC 50
unshielded twisted-pair (UTP) cable 8
updating
  network driver, Windows 16
  NIC diagnostic program, Windows 16
URL 63

V

verifying
  driver installation
    NetWare 31
    Windows 16
virtual NIC 2
VLANs 2
  802.1p Support property 18
  Windows 17
    configuration guidelines 18
    creating 22
    deleting or editing 24
    ID numbers, legal ranges 22
    number allowed in a server 18
    window, defined 19

W

wait tmo command 40
warranty 71
Windows
  adding NICs to a group 21
  changing the primary NIC 24
  creating a group 20
  creating a VLAN 22
  driver installation requirements 13, 57
  maintaining server features 17
  SHD configuration parameters 15
  system requirements 13, 57
  verifying driver installation 16
Windows 2000
  802.1p Support property 18
  changing property settings 25
  driver installation 14, 17
  miniport and LAN connections, identifying 25
  removing NIC software 51
  verifying installation 16
Windows NT
  driver installation 13
  help, driver installation 13, 57
  removing
    NIC software 50
  verifying installation 16
Windows system tray, 3Com icon 54
workgroup keep-alive packet 6
World Wide Web (WWW) 63

3Com Corporation LIMITED WARRANTY

This warranty applies to Customers located in the United States, Australia, Canada (except Quebec), Ireland, New Zealand, U.K, and other English language countries, and countries for which a translation into the local language is not provided.

EtherLink Server 10/100 PCI Network Interface Card

HARDWARE

3Com warrants to the end user ("Customer") that this hardware product to be free from defects in workmanship and materials, under normal use and service, for the following length of time from the date of purchase from 3Com or its authorized reseller:

Lifetime

Spare Parts and Spares Kits90 days

3Com's sole obligation under this express warranty shall be, at 3Com's option and expense, to repair the defective product or part, deliver to Customer an equivalent product or part to replace the defective item, or if neither of the two foregoing options is reasonably available, 3Com may, in its sole discretion, refund to Customer the purchase price paid for the defective product. All products that are replaced will become the property of 3Com. Replacement products may be new or reconditioned. 3Com warrants any replaced or repaired product or part for ninety (90) days from shipment, or the remainder of the initial warranty period, whichever is longer.

SOFTWARE

3Com warrants to Customer that each software program licensed from it will perform in substantial conformance to its program specifications, for a period of ninety (90) days from the date of purchase from 3Com or its authorized reseller. 3Com warrants the media containing software against failure during the warranty period. No updates are provided. 3Com's sole obligation under this express warranty shall be, at 3Com's option and expense, to refund the purchase price paid by Customer for any defective software product, or to replace any defective media with software which substantially conforms to applicable 3Com published specifications. Customer assumes responsibility for the selection of the appropriate applications program and associated reference materials. 3Com makes no warranty or representation that its software products will meet Customer's requirements or work in combination with any hardware or applications software products provided by third parties, that the operation of the software products will be uninterrupted or error free, or that all defects in the software products will be corrected. For any third party products listed in the 3Com software product documentation or specifications as being compatible, 3Com will make reasonable efforts to provide compatibility, except where the non-compatibility is caused by a "bug" or defect in the third party's product or from use of the software product not in accordance with 3Com's published specifications or user manual.

THIS 3COM PRODUCT MAY INCLUDE OR BE BUNDLED WITH THIRD PARTY SOFTWARE. THE USE OF WHICH IS GOVERNED BY A SEPARATE END USER LICENSE AGREEMENT. THIS 3COM WARRANTY DOES NOT APPLY TO SUCH THIRD PARTY SOFTWARE. FOR THE APPLICABLE WARRANTY, PLEASE REFER TO THE END USER LICENSE AGREEMENT GOVERNING THE USE OF SUCH SOFTWARE.

YEAR 2000 WARRANTY

In addition to the Hardware Warranty and Software Warranty stated above, 3Com warrants that each product sold or licensed to Customer on and after January 1, 1998 that is date sensitive will continue performing properly with regard to such date data on and after January 1, 2000, provided that all other products used by Customer in connection or combination with the 3Com product, including hardware, software, and firmware, accurately exchange date data with the 3Com product, with the exception of those products identified at 3Com's Web site, http://www.3com.com/products/yr2000.html, as not meeting this standard. If it appears that any product that is stated to meet this standard does not perform properly with regard to such date data on and after January 1, 2000, and Customer notifies 3Com before the later of April 1, 2000, or ninety (90) days after purchase of the product from 3Com or its authorized reseller, 3Com shall, at its option and expense, provide a software update which would effect the proper performance of such product, repair such product, deliver to Customer an equivalent product to replace such product, or if none of the foregoing is feasible, refund to Customer the purchase price paid for such product.

Any software update or replaced or repaired product will carry a Year 2000 Warranty for ninety (90) days after purchase or until April 1, 2000, whichever is later.

OBTAINING WARRANTY SERVICE

Customer must contact a 3Com Corporate Service Center or an Authorized 3Com Service Center within the applicable warranty period to obtain warranty service authorization. Dated proof of purchase from 3Com or its authorized reseller may be required. Products returned to 3Com's Corporate Service Center must be pre-authorized by 3Com with a Return Material Authorization (RMA) number or User Service Order (USO) number marked on the outside of the package, and sent prepaid and packaged appropriately for safe shipment, and it is recommended that they be insured or sent by a method that provides for tracking of the package. Responsibility for loss or damage does not transfer to 3Com until the returned item is received by 3Com. The repaired or replaced item will be shipped to Customer, at 3Com's expense, not later than thirty (30) days after 3Com receives the defective product.

3Com shall not be responsible for any software, firmware, information, or memory data of Customer contained in, stored on, or integrated with any products returned to 3Com for repair, whether under warranty or not.

Dead- or Defective-on-Arrival. In the event a product completely fails to function or exhibits a defect in materials or workmanship within the first forty-eight (48) hours of installation but no later than thirty (30) days after the date of purchase, and this is verified by 3Com, it will be considered dead- or defective-on-arrival (DOA) and a replacement shall be provided by advance replacement. The replacement product will normally be shipped not later than three (3) business days after 3Com's verification of the DOA product, but may be delayed due to export or import procedures. The shipment of advance replacement products is subject to local legal requirements and may not be available in all locations. When an advance replacement is provided and Customer fails to return the original product to 3Com within fifteen (15) days after shipment of the replacement, 3Com will charge Customer for the replacement product, at list price.

INCLUDED SERVICES

Telephone Support, with coverage for basic troubleshooting only, will be provided for lifetime of the product, on a commercially reasonable efforts basis. Telephone support is available from 3Com only if Customer purchased this product directly from 3Com, or if Customer's reseller is unable to provide telephone support. Please refer to the Technical Support appendix in the user guide for telephone numbers.

3Com's Web and Bulletin Board Service are available at no charge, and provide software and firmware upgrades, a bug list, and technical information about 3Com products.

WARRANTIES EXCLUSIVE

IF A 3COM PRODUCT DOES NOT OPERATE AS WARRANTED ABOVE, CUSTOMER'S SOLE REMEDY FOR BREACH OF THAT WARRANTY SHALL BE REPAIR, REPLACEMENT, OR REFUND OF THE PURCHASE PRICE PAID, AT 3COM'S OPTION. TO THE FULL EXTENT ALLOWED BY LAW, THE FOREGOING WARRANTIES AND REMEDIES ARE EXCLUSIVE AND ARE IN LIEU OF ALL OTHER WARRANTIES, TERMS, OR CONDITIONS, EXPRESS OR IMPLIED, EITHER IN FACT OR BY OPERATION OF LAW, STATUTORY OR OTHERWISE, INCLUDING WARRANTIES, TERMS, OR CONDITIONS OF MERCHANTABILITY, FITNESS FOR A PARTICULAR PURPOSE, SATISFACTORY QUALITY, CORRESPONDENCE WITH DESCRIPTION, AND NON-INFRINGEMENT, ALL OF WHICH ARE EXPRESSLY DISCLAIMED. 3COM NEITHER ASSUMES NOR AUTHORIZES ANY OTHER PERSON TO ASSUME FOR IT ANY OTHER LIABILITY IN CONNECTION WITH THE SALE, INSTALLATION, MAINTENANCE OR USE OF ITS PRODUCTS.

3COM SHALL NOT BE LIABLE UNDER THIS WARRANTY IF ITS TESTING AND EXAMINATION DISCLOSE THAT THE ALLEGED DEFECT OR MALFUNCTION IN THE PRODUCT DOES NOT EXIST OR WAS CAUSED BY CUSTOMER'S OR ANY THIRD PERSON'S MISUSE, NEGLECT, IMPROPER INSTALLATION OR TESTING, UNAUTHORIZED ATTEMPTS TO OPEN, REPAIR OR MODIFY THE PRODUCT, OR ANY OTHER CAUSE BEYOND THE RANGE OF THE INTENDED USE, OR BY ACCIDENT, FIRE, LIGHTNING, POWER CUTS OR OUTAGES, OTHER HAZARDS, OR ACTS OF GOD.

LIMITATION OF LIABILITY

TO THE FULL EXTENT ALLOWED BY LAW, 3COM ALSO EXCLUDES FOR ITSELF AND ITS SUPPLIERS ANY LIABILITY, WHETHER BASED IN CONTRACT OR TORT (INCLUDING NEGLIGENCE), FOR INCIDENTAL, CONSEQUENTIAL, INDIRECT, SPECIAL, OR PUNITIVE DAMAGES OF ANY KIND, OR FOR LOSS OF REVENUE OR PROFITS, LOSS OF BUSINESS, LOSS OF INFORMATION OR DATA, OR OTHER FINANCIAL LOSS ARISING OUT OF OR IN CONNECTION WITH THE SALE, INSTALLATION, MAINTENANCE, USE, PERFORMANCE, FAILURE, OR INTERRUPTION OF ITS PRODUCTS, EVEN IF 3COM OR ITS AUTHORIZED RESELLER HAS BEEN ADVISED OF THE POSSIBILITY OF SUCH DAMAGES, AND LIMITS ITS LIABILITY TO REPAIR, REPLACEMENT, OR REFUND OF THE PURCHASE PRICE PAID, AT 3COM'S OPTION. THIS DISCLAIMER OF LIABILITY FOR DAMAGES WILL NOT BE AFFECTED IF ANY REMEDY PROVIDED HEREIN SHALL FAIL OF ITS ESSENTIAL PURPOSE.

DISCLAIMER

Some countries, states, or provinces do not allow the exclusion or limitation of implied warranties or the limitation of incidental or consequential damages for certain products supplied to consumers, or the limitation of liability for personal injury, so the above limitations and exclusions may be limited in their application to you. When the implied warranties are not allowed to be excluded in their entirety, they will be limited to the duration of the applicable written warranty. This warranty gives you specific legal rights which may vary depending on local law.

GOVERNING LAW

This Limited Warranty shall be governed by the laws of the State of California, U.S.A. excluding its conflicts of laws principles and excluding the United Nations Convention on Contracts for the International Sale of Goods.

3Com Corporation
5400 Bayfront Plaza
P.O. Box 58145
Santa Clara, CA 95052-8145
(408) 326-5000

REGULATORY INFORMATION

FCC CLASS B STATEMENT

This device complies with Part 15 of the FCC Rules. Operation is subject to the following two conditions:

1 This device may not cause harmful interference, and

2 This device must accept any interference received, including interference that may cause undesired operation.

WARNING: This equipment has been tested and found to comply with the limits for a Class B digital device, pursuant to Part 15 of the FCC Rules. These limits are designed to provide reasonable protection against harmful interference in a residential installation. This equipment generates, uses and can radiate radio frequency energy and, if not installed and used in accordance with the instructions, may cause harmful interference to radio communications. However, there is no guarantee that interference will not occur in a particular installation. If this equipment does cause harmful interference to radio or television reception, which can be determined by turning the equipment off and on, the user is encouraged to try to correct the interference by one or more of the following measures:

- Reorient or relocate the receiving antenna.
- Increase the separation between the equipment and receiver.
- Connect the equipment into an outlet on a circuit different from the one which the receiver is connected to.
- Consult the dealer or an experienced radio/TV technician for help.

The user may find the following booklet prepared by the Federal Communications Commission helpful:

The Interference Handbook

This booklet is available from the U.S. Government Printing Office, Washington, D.C. 20402. Stock No. 004-000-00345-4.

Tested to comply with the FCC Standards for home and office use.

NOTE: In order to maintain compliance with the limits of a Class B digital device, 3Com requires that you use quality interface cables when connecting to this device. Changes or modifications not expressly approved by 3Com could void the user's authority to operate this equipment. Refer to the manual for specifications on cabling types.

FCC Declaration of Conformity

We declare under our sole responsibility that the

Description	Model Number
3Com EtherLink Server 10/100 PCI NIC	3C980-TXM 3C980B-TXM 3C980C-TXM
3Com EtherLink 10/100 PCI Dual Port Server NIC	3C982-TXM

to which this declaration relates, is in conformity with the following standards or other normative documents:

- ANSI C63.4-1992 Methods of Measurement
- Federal Communications Commission 47 CFR Part 15, subpart B
  15.107 (e) Class B Conducted Limits
  15.109 (g) Class B Radiated Emissions Limits

Responsible Party:

3Com Corporation, 5400 Bayfront Plaza, P.O. Box 58145, Santa Clara, CA 95052-8145 (408) 326-5000

Industry Canada Class B Emission Compliance Statement

This Class B digital apparatus complies with Canadian ICES-003.

Avis de Conformité à la Réglementation d'Industrie Canada

Cet appareil numérique de la classe B est conform à la norme NMB-003 du Canada.

VCCI Class B Statement

この装置は、情報処理装置等電波障害自主規制協議会（ＶＣＣＩ）の基準に基づくクラスＢ情報技術装置です。この装置は、家庭環境で使用することを目的としていますが、この装置がラジオやテレビジョン受信機に近接して使用されると、受信障害を引き起こすことがあります。
取扱説明書に従って正しい取り扱いをして下さい。

This is a Class B product based on the standard of the Voluntary Control Council for Interference from Information Technology Equipment (VCCI). If this is used near a radio or television receiver in a domestic environment, it may cause radio interference. Install and use the equipment according to the instruction manual.

3COM END USER SOFTWARE LICENSE AGREEMENT

IMPORTANT: Read Before Using This Product

YOU SHOULD CAREFULLY READ THE FOLLOWING TERMS AND CONDITIONS BEFORE INSTALLING AND USING, THE USE OF WHICH IS LICENSED BY 3COM CORPORATION ("3COM") TO ITS CUSTOMERS FOR THEIR USE ONLY AS SET FORTH BELOW. INSTALLING OR USING ANY PART OF THE SOFTWARE INDICATES THAT YOU ACCEPT THESE TERMS AND CONDITIONS. IF YOU DO NOT AGREE TO THE TERMS AND CONDITIONS OF THIS AGREEMENT, DO NOT INSTALL OR USE THE SOFTWARE. YOU SHOULD RETURN THE ENTIRE PRODUCT WITH THE SOFTWARE UNUSED TO THE SUPPLIER WHERE YOU OBTAINED IT.

LICENSE

3Com grants you a nonexclusive, nontransferable (except as specified herein) license to use the accompanying software program(s) in executable form (the "Software") and accompanying documentation (the "Documentation"), subject to the terms and restrictions set forth in this Agreement. You are not permitted to lease, rent, distribute or sublicense (except as specified herein) the Software or Documentation or to use the Software or Documentation in a time-sharing arrangement or in any other unauthorized manner. Further, no license is granted to you in the human readable code of the Software (source code). Except as provided below, this Agreement does not grant you any rights to patents, copyrights, trade secrets, trademarks, or any other rights with respect to the Software or Documentation.

Subject to the restrictions set forth herein, the Software is licensed to be used on any workstation or any network server owned by or leased to you, for your internal use, provided that the Software is used only in connection with a 3Com adapter. You may reproduce and provide one (1) copy of the Software and Documentation for each such workstation or network server on which the Software is used as permitted hereunder. Otherwise, the Software and Documentation may be copied only as essential for backup or archive purposes in support of your use of the Software as permitted hereunder. Each copy of the Software and Documentation must contain 3Com's and its licensors' proprietary rights and copyright notices in the same form as on the original. You agree not to remove or deface any portion of any legend provided on any licensed program or documentation delivered to you under this Agreement.

ASSIGNMENT; NO REVERSE ENGINEERING

You may transfer the Software, Documentation and the licenses granted herein to another party in the same country in which you obtained the Software and Documentation if the other party agrees in writing to accept and be bound by the terms and conditions of this Agreement. If you transfer all copies of the Software and Documentation to the party or you must destroy any copies not transferred. Except as set forth above, you may not assign or transfer your rights under this Agreement.

Modification, reverse engineering, reverse compiling, or disassembly of the Software is expressly prohibited. However, if you are a European Community ("EC") resident, information necessary to achieve interoperability of the Software with other programs within the meaning of the EC Directive on the Legal Protection of Computer Programs is available to you from 3Com upon written request.

EXPORT RESTRICTIONS

You agree that you will not export or re-export the Software, Documentation or other technical data received hereunder (or any copies thereof) (collectively "Technical Data") or any products utilizing the Technical Data in violation of any applicable laws or regulations of the United States or the country in which you obtained them or where you reside. **In addition, the Technical Data covered by this Agreement may contain data encryption code which is unlawful to export or transfer from the United States or Canada without an approved US Department of Commerce export license and/or appropriate foreign export or import license.** You are responsible for obtaining any licenses to export, re-export or import the Technical Data. In addition to the above, Technical Data may not be used, exported or re-exported (i) into or to a national or resident of any country to which the U.S. has embargoed goods; or (ii) to any one on the U.S. Treasury Department's list of Specially Designated Nationals or the U.S. Commerce Department's Table of Denial Orders.

TRADE SECRETS; TITLE

You acknowledge and agree that the structure, sequence and organization of the Software are the valuable trade secrets of 3Com and its suppliers. You agree to hold such trade secrets in confidence. You further acknowledge and agree that ownership of, and title to, the Software and Documentation and all subsequent copies thereof regardless of the form or media are held by 3Com and its suppliers.

UNITED STATES GOVERNMENT LEGENDS

The Software, Documentation and any other technical data provided hereunder is commercial in nature and developed solely at private expense. The Software is delivered as "Commercial Computer Software" as defined in DFARS 252.227-7014 (June 1995) or as a commercial item as defined in FAR 2.101(a) and as such is provided with only such rights as are provided in this Agreement, which is 3Com's standard commercial license for the Software. Technical data is provided with limited rights only as provided in DFAR 252.227-7015 (Nov. 1995) or FAR 52.227-14 (June 1987), whichever is applicable.

TERM AND TERMINATION

This Agreement and license will expire fifty (50) years from the date that you install the Software and Documentation, if it is not terminated earlier. You may terminate it at any time by destroying the Software and Documentation together with all copies and merged portions in any form. It will also terminate immediately if you fail to comply with any term or condition of this Agreement. Upon such termination you agree to destroy the Software and Documentation, together with all copies and merged portions in any form.

LIMITED WARRANTIES AND LIMITATION OF LIABILITY

All warranties and limitations of liability applicable to the Software are as stated on the Limited Warranty Card or in the product manual, whether in paper or electronic form, accompanying the Software. Such warranties and limitations of liability are incorporated herein in their entirety by this reference.

GOVERNING LAW

This Agreement shall be governed by the laws of the State of California, U.S.A. excluding its conflicts of laws principles and excluding the United Nations Convention on Contracts for the International Sale of Goods.

SEVERABILITY

In the event any provision of this Agreement is found to be invalid, illegal or unenforceable, the validity, legality and enforceability of any of the remaining provisions shall not in any way be affected or impaired and a valid, legal and enforceable provision of similar intent and economic impact shall be substituted therefor.

ENTIRE AGREEMENT

This Agreement sets forth the entire understanding and agreement between you and 3Com and supersedes all prior agreements, whether written or oral, with respect to the Software and Documentation, and may be amended only in a writing signed by both parties.

Should you have any questions concerning this Agreement or if you desire to contact 3Com for any reason, please contact the 3Com subsidiary serving your country, or write: 3Com Corporation, Customer Support Information, 5400 Bayfront Plaza, Santa Clara, CA 95052

3Com is a registered trademark of 3Com Corporation.

3Com Corporation
5400 Bayfront Plaza, P.O. Box 58145
Santa Clara, CA 95052-8145
(408) 326-5000

© Copyright 2000 3Com Corporation. All rights reserved

PRODUCT REGISTRATION

To ensure the very best service and support, register your 3Com product now.

International Customers: Visit **http://www.3com.com/productreg** to register.

U.S. Customers: Complete and mail the attached registration card, or visit **http://www.3com.com/productreg** to register.